BeoCenter 2 Audio

Type Master Unit 2802
Type Socket Unit 2839, 2840, 2841, 2842, 2843, 2844, 2845, 2846, 2847

Service Manual
English

German, French, Italian, Spanish, Danish, Dutch and Japanese versions are available in the Retail System

ABO-CENTER V/HENRIKSENS ELEKTRONIK

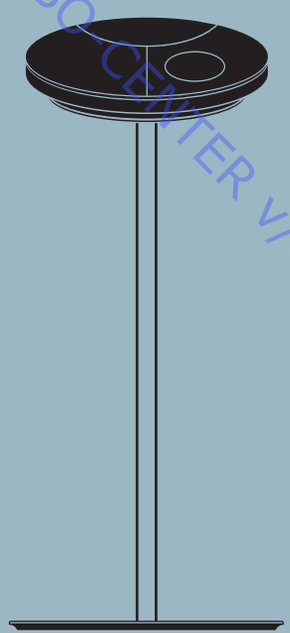

This Service Manual must be returned with the defective parts/back-up suitcase !

BANG & OLUFSEN

CONTENTS

Survey of modules 1.1

How to service 1.2

PIN-code 1.4

Warnings 1.6

Adjustments 2.1

Service menu 3.1

Service tips 4.1

Replacement of modules 5.1

Specification guidelines for service use 6.1

Overall blockdiagram 7.1

Wiring diagram 7.3

Available parts 8.1

ABO-CENTER V/HENRIKSENS ELEKTRONIK

BeoCenter 2 Audio – Master Unit

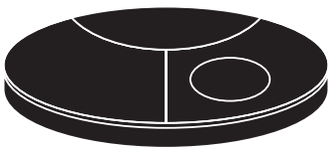

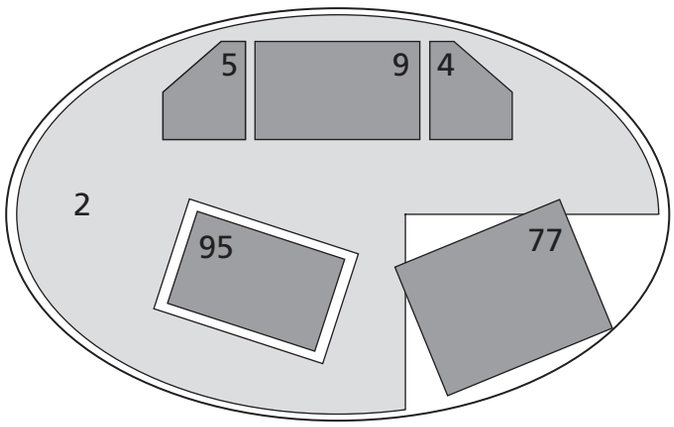

ABO-CENTER V/HENRIKSENS ELEKTRONIK

PCB2	Top Interface
PCB4	IR receiver two (right)
PCB5	IR receiver one (left)
PCB9	Display
PCB77	CD Main Board Assy
PCB95	CD Traverse Mechanism

BeoCenter 2 Audio – Socket Unit

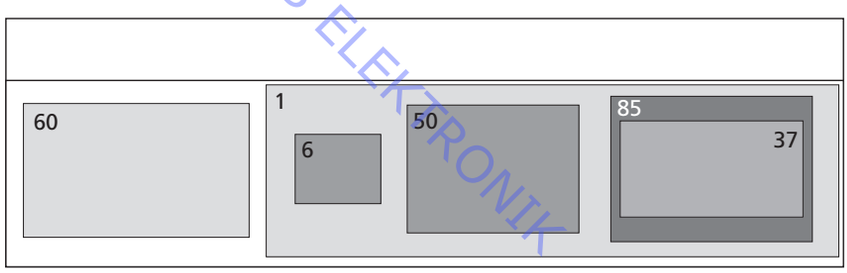

PCB1	AV panel DAB
PCB6	µP H8-4
PCB37	DAB module
PCB50	Analog sound engine
PCB60	SMPS
PCB85	Tuner EU/US/JPN

How to service

Front line service

Both the Master and the Socket Unit has been developed for simple module exchange to follow the on-site service strategy. Module exchange is possible on-site, at the dealer or in the service workshop whatever is most convenient in each case. For on-site service a back-up suitcase must be used.
Module exchange is the recommended way to perform service, due to the fact that most of the modules are multi layer based, and most of the circuits are on a single main PCB.

An electrical fault symptom can be removed during one visit to the customers home if you bring a BeoCenter 2 back-up suitcase with you.
Is it a mechanical symptom, the particular part must be brought with you separately.

The Socket Unit and the Master Unit must be connected when testing, because the Socket Unit contains the power supply.

Service documentation

Service documentation for BeoCenter 2 Audio will be a Service Manual with part nos. for the back-up suitcase, electrical and mechanical parts, user's guides etc.

ABO-CENTER V/HENRIKSENS ELEKTRONIK

Converting mains voltage supply

The Master Unit has only one variant for all markets.
The Socket Unit has separate type nos. for each market, due to country approvals. The mains voltage is determined by the type nos. of the Socket Unit, there are only two internal mains voltage settings (a jumper) on the SMPS, 100/120V and 230/240V AC. (X103, when mounted = 100/120V).

For tuner setup use the Service Tool for reprogramming.

The only variant on the Master Unit : 2802

The variants on the Socket Unit :

Type no.	Mains Voltage	Market
2839	230V/240V	Austria, Azerbaijan, Belgium, Bulgaria, Croatia, Czech Repub., Denmark, Egypt, Estonia, Faroe Islands, Finland, France, Germany, Greece, Greenland, Holland, Hungary, Indonesia, Iceland, India, Israel, Italy, Kazakhstan, Latvia, Lebanon, Liechtenstein, Lithuania, Malaysia, Morocco, Norway, Oman, Pakistan, Poland, Portugal, Qatar, Romania, Russia, Saudi Arabia, Serbia, Singapore, Slovak Rep., Slovenia, Spain, St. Martin, Sweden, Switzerland, Thailand, Turkey, Ukraine, Uzbekistan
2840	230V	Bahrain, Botswana, Dubai, Ghana, Hong Kong, Ireland, Kuwait, Nigeria, South Africa, UK, United Arab Emirates
2841	120V	Brazil, Caribbean Islands, Canada, Mexico, Panama, USA
2842	100V	Japan
2843	240V	Australia, New Zealand
2844	110V	Taiwan
2845	110V	Korea
2846	230V	Argentina, Chile, Peru, Uruguay
2847	230V	China

ABO-CENTER V/HENRIKSENS ELEKTRONIK

PIN-code

The product has a 4 digit PIN-code, of the user´s own choice, which must be entered if the product has been disconnected from the mains for 15-30 min.
If the PIN-code is activated, and the product has been without mains for 15-30 min., the user will be asked to enter the 4 digit PIN-code when the product is switched on.

Before the product is handed in to service it is a good idea to ask the customer to deactivate the PIN-code.

The PIN-code is activated when the product is shipped from Bang & Olufsen.

Refer to the user guide for further information.

PIN-code active prior to service

If the PIN-code is not deactivated prior to service you must use the Service code to unlock the product.

ABO-CENTER V/HENRIKSENS ELEKTRONIK

Service code

The service code,
- unlocks the product, but does not affect the pin-code setting
- gives you 12 hours service time

Entering the Service code

1. When the product asks for PIN-CODE press and hold ◀◀ for 3 seconds.
2. The Master code menu appears.
3. Enter the Service code: 1 1 1 1 1.

Important notice concerning Service time

The service time is active as long as the product is connected to the mains, including Standby.

To obtain maximum service time:
Only connect the product to the mains while you are performing actual service on the product.

When the service time is expired, the product can only be unlocked by entering the PIN-code or the Master code.

Registration of the modules

The modules will be registered to the product in the following situations:
- the product has been connected to the mains for more than 12 hours, including Standby time.
- the PIN-code is activated or deactivated.

PIN-code deactivated by customer prior to service

With the PIN-code deactivated prior to service you must be aware of the modules will be registered to the product in the following situations:
- the product has been connected to the mains for more than 12 hours, including Standby time.
- the PIN-code is activated or deactivated.

The registration of modules in the product can only be changed at Bang & Olufsen.

Activate the PIN-code

Select the SETUP menu.
Press ◀◀ twice and then **STOP** to bring up the PINCODE SETUP menu.
Enter the 4 digit Pin-code. Re-enter the code to confirm it and press **GO**.
If you want to change or delete the PIN-code, enter the correct PIN-code and press **GO**.
It is now possible to change the PIN-code or delete the PIN-code.

Enter the PIN-code

If the PIN-code is activated and the product is disconnected from the mains for more than15-30 minutes, a PINCODE menu appears as soon as the product is switched on.
Enter the PIN-code, and the product starts again.

If the PIN-code has been forgotten

If the PIN-code has been forgotten the only way to unlock the product again is by entering a 5 digit Master-code.
The Master-code is ordered by sending a request via the Retail System.
When the product prompts for a PIN-code, press and hold ◀◀ down to bring up the MASTERCODE menu.
Enter the Master-code and press **GO**. This will deactivate the PIN-code and reactivate the product.

Product locked by PIN-code

The product is locked by PIN-code when:

- The PIN-code is activated and the mains is disconnected for more than 15- 30 minutes.

The product is unlocked when the PIN-code is entered.

The PIN-code counter is set to 5 attempts within 3 hours.
When a wrong PIN-code has been entered 5 times within 3 hours, the product cannot receive any commands for a period of 3 hours.
After this period the PIN-code counter is reset.
The product must be in standby mode to activate the timer.

ABO-CENTER V/HENRIKSENS ELEKTRONIK

Warnings

ESD

When electrical replacements or disassembly is taking place, use a ESD-mat. The internal electronic are very sensitive to static electricity.

When mains voltage on the BeoCenter 2 is required, remove the connection from the BeoCenter 2 to the ESD mat.

Laser exposure

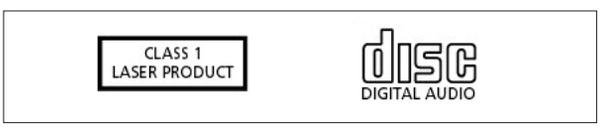

The BeoCenter 2 contains a laser system and is classified as a class 1 laser product. The BeoCenter 2 must only be opened by qualified personal only.

General Warnings

Wear cotton gloves to avoid placing fingerprints on the product.

The aluminium and display surface on the product is very sensitive, so handling should be done with great care to avoid damage. When transporting the BeoCenter 2 it is recommended to use the product cover, part no. 3375021.

The interface cable is very sensitive to sharp bends and other large mechanical influence. Also be sure that the plugs in each end, are connected correctly.

Cleaning

Clean the BeoCenter 2 surfaces using a lint-free cloth which you have wrung firmly in lukewarm water.

Never use alcohol or other solvents to clean any parts of the BeoCenter 2.

Lithium battery

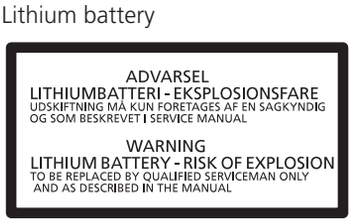

WARNING
Short-circuit and overcharging of some types of lithium batteries may result in a violent explosion.

ABO-CENTER V/HENRIKSENS ELEKTRONIK

Adjustments

Digital Audio Broadcasting (DAB)

The DAB module (type 2203) for the BeoCenter 2 Socket Unit will automatically adapt to the band and frequency table preprogrammed in the application software for the particular Socket Unit type number. If the band and frequency table setup from the factory do not correspond to the particular country where it is used, the PC-based ServiceTool program must be used.

DAB aerial

Select a channel transmitting a DAB mutiplex signal. Position the aerial to maximum signal level.

Keyboard: Press "LIST" ▼ select "SETUP" ▶▶ "RADIO" ▼ "DAB AERIAL ADJUSTMENT" then press **GO**.

Beo4 remote control: Press "MENU" ▼ select "SETUP" ▶▶ "RADIO" ▼ "DAB AERIAL ADJUSTMENT" then press **GO**.

Watch the indicator bar on the display while adjusting the DAB aerial. The white fields indicates minimal risk of signal drop-out.

DAB DRC

Dynamic Range Control "DRC" appears in the lower right-hand corner of the display if transmitted with the DAB program and DRC is not set to OFF. DRC in nominal 'NOM' or 'MAX' position reduces the signal level between the weakest and the strongest signal and thereby compensates for disturbance from the surroundings. See more information in the Users guide.

ABO-CENTER V/HENRIKSENS ELEKTRONIK

ABO-CENTER V/HENRIKSENS ELEKTRONIK

Service Menu

There are two ways to enter the service menu, either by the keyboard or the Beo4 remote.

Keyboard: With the BC2 turned on, press “list” -> “Setup” then press ⏭ and within 3 sec. Press **0 0 GO**.

Beo4 remote: With the BC2 turned on, press “menu”-> “Setup” then press ⏭ and within 3 sec. Press **0 0 GO**.

Note you have entered the service menu, and have the following options:

```
.. Service Menu
1  SW Versions…
2  Error List…
3  Product ID…
4  Service Counters…
5  Default Settings
6  Keyboard Test…
7  Loader Lock
8  DVD Service
9  DAB service display
10 Max. Volume
```

Select wanted menu using general menu navigation rules.

1. SW Versions

```
...SW Versions
1  AP            3.61a
2  OS           16.20a
3  AP Boot       1.10a
4  IOP          22.00a
5  FM Tuner      1.00a
6  DAB Tuner      1.9-4
7  Master Unit   3.20a
```

2. Error List

Select from the list NVMEM errors or VMEM errors.

```
...Error List
1  NVMEM
2  VMEM
```

The NVMEM and the VMEM menu has the same layout, each menu will display the last 15 errors. 1 is NVMEM (non volatile memory) and 2 is VMEM (volatile memory). The errors in NVMEM are stored permanently, and can be used if BC2 has been disconnected from mains after an error has occurred. The VMEM only stores errors that have occurred after BC2 has been connected to the mains.

ABO-CENTER V/HENRIKSEN ELEKTRONIK

```
...NVMEM
 1  4F 00000002 10/11/02…
 2   08 16000000  9/11/02…
 3   4F 00000002  8/11/02…
 4   08 16000000  7/11/02…
 5   4F 00000002  7/11/02…
 6   08 16000000  6/11/02…
 7   4F 00000002  5/11/02…
 8   08 16000000  5/11/02…
 9   4F 00000002  4/11/02…
10    .. ........ --/--/--…
11    .. ........ --/--/--…
12    .. ........ --/--/--…
13    .. ........ --/--/--…
14    .. ........ --/--/--…
15    .. ........ --/--/--…
```

```
Complete Error Line
```

```
1  4F 00000002 10/11/02-09:35:21
```

Date and time parameter will scroll according to general rules for the error, the cursor points to.

By pressing ⏩ a more detailed view of the corresponding error is shown.

```
...4F 00000002
Date 10/11/02-09:35:21
WATCHDOG RESET
```

Pressing ⏪ returns to Error List.

The Error Layout

1	4F	00000002	10/11/02	09:35:21
Err_no,	error_code,	error_parm,	Date,	Time
1-15 dec	0-FF	0-FFFFFFFF	dd/mm/yy	hh:mm:ss
2digit dec	2digit HEX code	8digit HEX code		

error_parm are divided into 4 sections
digit 1 and 2 XX------ error_type
digit 3 and 4 --XX---- error_param1
digit 5 and 6 ----XX-- error_param2
digit 7 and 8 ------XX error_param3

EP1 = error_parm1
EP2 = error_parm2
EP3 = error_parm3
Error_codes are written in **bold** and error_type in underline

ABO-CENTER V/HENRIKSENS ELEKTRONIK

The Error LIST

Is a list of all the possible errors in BC2, it's divided into, **error_code** with the sub parameter error_type, error_type which has 3 sub parameter error_param1, error_param2 and error_param3.
When ever a error that can be related to HW, SW or MEK, the cause is described, sometimes there can be more than one cause for the corresponding error, all the possible causes are listed with the most likely listed first.

Error_ code	Error _type	Error_parm 1-3	Description	Cause (check/replace)
00			NO APOS ERROR	No error
08			APOS IOP ERROR	µP H8 Module
10			ILLEGAL TIMER ID	SW bug, check for AP SW update
11			TIMER NOT FREE	SW bug, check for AP SW update
15			ILLEGAL DATE VALUE	SW bug, check for AP SW update
16			ILLEGAL TIME VALUE	SW bug, check for AP SW update
17			ILLEGAL TIMER PARAMETERS	SW bug, check for AP SW update
20			ILLEGAL SIMPLE MESSAGE ID	SW bug, check for AP SW update
21			OUT OF MESSAGE BUFFERS	SW bug, check for AP SW update
22			MESSAGE BUFFER VIRTUAL LIMIT REACHED	SW bug, check for AP SW update
25			ILLEGAL REPOSITORY TYPE	SW bug, check for AP SW update
26			OUT OF REPOSITORIES	SW bug, check for AP SW update
27			REPOSITORY VIRTUAL LIMIT REACHED	SW bug, check for AP SW update
28			NULL POINTER DELETE	SW bug, check for AP SW update
29			ILLEGAL REPOSITORY ADDR	SW bug, check for AP SW update
2A			REPOSITORY IS ALREADY FREE	SW bug, check for AP SW update
40			NON ISR FUNC CALLED FROM ISR	SW bug, check for AP SW update
41			PHYSICAL STACK LIMIT REACHED	SW bug, check for AP SW update
42			STACK VIRTUAL LIMIT REACHED	SW bug, check for AP SW update
43			OUT OF IAS OBJETS	SW bug, check for AP SW update
44			IAS SIGNAL LOST	SW bug, check for AP SW update
45			OVERFLOW IN IAS FIFO	SW bug, check for AP SW update
47			LSL QUEUE NOT ATTACHED	SW bug, check for AP SW update
48			SCAN QUEUE NOT ATTACHED	SW bug, check for AP SW update
4A			UART 0 QUEUE OT ATTACHED	SW bug, check for AP SW update
4B			TIIC QUEUE NOT ATTACHED	SW bug, check for AP SW update
4C			RIIC QUEUE NOT ATTACHED	SW bug, check for AP SW update
4D			OUT OF POWER DOWN CALLBACK OBJ	SW bug, check for AP SW update
4E			POWER DOWN ENTERED WITH TIMER RUNNING	SW bug, check for AP SW update
4F			WATCHDOG RESET	Check for others errors in NVMEM
80			BAS ERROR	
	00		NO BAS ERROR	No error
	01		IIC BUS ERR	Always IO_ERROR not in BC2
	02	Eeprm addr	EE WR ERR	Always IO_ERROR not in BC2
	03	Eeprm addr	EE RD ERR	Always IO_ERROR not in BC2
	04	Eeprm addr	EE RD FF ERR	Always IO_ERROR not in BC2
	0B	Eeprm addr	EEPROM WRITE OVERFLOW	Always IO_ERROR not in BC2
	0C	Eeprm addr	EEPROM CONTROL INIT FAIL	Always IO_ERROR not in BC2
	0D	Eeprm addr	EEPROM CONTROL CALLOC FAIL	Always IO_ERROR not in BC2
A0			IO ERROR	
	00		NO APOS IO ERROR	
	01		IIC1 2 ERROR	
		EP 1= 00	NO IIC1 2 ERROR	Use EP2
		EP 1 = 01	IIC1 2 ACKNOWLEDGE MISSING	Use EP2
		EP 1 = 02	IIC1 2 ARBITRATION LOST	Use EP2
		EP 1 = 03	IIC1 2 BUS BUSY	Use EP2
		EP 1 = 04	IIC1 2 TIMEOUT	Use EP2
		EP 1 = 05	IIC1 2 SLAVE TRANS BUF DIFF	Use EP2
		EP 1 = 06	IIC1 2 SLAVE NOT ADDRESSED	Use EP2

ABO-CENTER V/HENRIKSENS ELEKTRONIK

		EP 1 = 07	IIC1 2 SLAVE TRANS BUF ERR	Use EP2
		EP 1 = 08	IIC1 2 ICB ERROR	Use EP2
		EP 2 = D0	CLOCK IIC ADDR	(IC162) Av Panel
		EP 2 = 88	A ENG IIC ADDR	(IC300) Analog Sound Engine
		EP 2 = 22	ST RDS IIC ADDR	(IC402) AM/FM Tuner
		EP 2 = C6	ST TUNER IIC ADDR	(IC200) AM/FM Tuner
		EP 2 = C4	ST PLL IIC ADDR	(IC200) AM/FM Tuner
		EP 2 = 8C	ST STEREO DECODER IIC ADDR	(IC300) AM/FM Tuner
		EP 2 = 7E	ST LPC IIC ADDR	(IC401) AM/FM Tuner
		EP 2 = A0	ST EEPROM ADDR	(IC203) AM/FM Tuner
		EP 2 = EA	DAB TUNER ADDR	DAB Tuner
		EP 3 = 00	IIC1 BUS ID	IIC bus no. for e.g. measurements
		EP 3 = 01	IIC2 BUS ID	IIC bus no. for e.g. measurements
	02	Eeprm addr	EEPROM WRITE ERROR	Default settings or replace EEPROM
	03	Eeprm addr	EEPROM READ ERROR	Default settings or replace EEPROM
	04	Eeprm addr	EEPROM READ ERROR ONLY FF	Default settings or replace EEPROM
	0B	Eeprm addr	EE WRITE OVERFLOW	Default settings or replace EEPROM
	0C	Eeprm addr	EE CONTROL INIT FAIL	Default settings or replace EEPROM
	0D	Eeprm addr	EE CONTROL CALLOC FAIL	Default settings or replace EEPROM
	20		MLSL STATUS ERROR	
		EP 1 = 20	CONFIG IMPOSS	ML installation, Analog Sound Engine, or Av Panel
		EP 1 = 10	LINK TIED UP	ML installation, Analog Sound Engine, or Av Panel
		EP 1 = 08	LINK TIED DOWN	ML installation, Analog Sound Engine, or Av Panel
		EP 1 = 04	LINK OK	No error
		EP 1 = 02	ML CURRENT MASTER	No error
		EP 1 = 22	CONFIG IMPOSS CURRENT MASTER	ML installation, Analog Sound Engine, or Av Panel
		EP 1 = 12	LINK TIED UP CURRENT MASTER	ML installation, Analog Sound Engine, or Av Panel
		EP 1 = 0A	LINK TIED DOWN CURRENT MASTER	ML installation, Analog Sound Engine, or Av Panel
		EP 1 = 06	LINK OK AND CURRENT MASTER	No error
	21		MLSL TIMEOUT ERROR	No error
	22		MLSL TX BUF FULL TLG NOT SEND	No error
	23		ML KEY LOST KEY REPAIRED	No error
	24		EXTERNAL COMMUNICATION NOT ALLOWED IN PREPROJECT	No error
	25		LSL FORMAT ERROR	
		EP 1 = 01	LSL2 ERROR ID	Defect Power link. Connection, Analog Sound Engine or Av Panel
	27		LSL TX IMPOSS	
		EP 1 = 01	LSL2 ERROR ID	Defect Power link. Connection or Av Panel
	28		LSL LINK TIED UP	
		EP 1 = 01	LSL2 ERROR ID	Defect Power link. Connection, Analog Sound Engine or Av Panel
	29		LSL LINK TIED DOWN	
		EP 1 = 01	LSL2 ERROR ID	Defect Power link. Connection, Analog Sound Engine or Av Panel
	2A		GENERIC ICB ERROR	µP H8 Module
	2B		ICB L7 TIMEOUT	ML installation, Analog Sound Engine, Av Panel, or uP H8 Module
	2C		ICB L7 ILLEGAL TIMEOUT	µP H8 Module
	2D		ICB L7 OUT OF REPOSITORIES	µP H8 Module
	2E		ICB L7 ILLEGAL L7 ACK	µP H8 Module
	2F		ICB L7 ACKNOWLEDGE UNEXPECTED	µP H8 Module
	30		ICB L7 READ RESPONSE UNEXPECTED	µP H8 Module
	31		ICB L7 ILLEGAL RESOURCE TYPE	µP H8 Module

ABO CENTER V/HENRIKSENS ELEKTRONIK

	32		ICB L7 RESOURCE STILL RUNNING	µP H8 Module
	33		ICB L7 RESOURCE ALLREADY FREE	µP H8 Module
	34		ICB L7 ILLEGAL IOP SERVICE	µP H8 Module
	35		ICB L7 ILLEGAL IOP OBJECT	µP H8 Module
	36		ICB L7 TELEGRAM FLUSHED	µP H8 Module
	37		ICB L7 RESOURCE DISABLED	µP H8 Module
	38		ICB L7 HW CLOCK ILLEGAL COMMAND	µP H8 Module
	39		ICB L7 HW CLOCK ILLEGAL EVENT	µP H8 Module
	3A		ICB L2 RETRANS LIMIT REACHED	µP H8 Module
	3B		IIC COMPONENT DISABLED	µP H8 Module
	3C		POWER DOWN OF IOP IMPOSSIBLE	µP H8 Module
	3D		CSD BUS DISABLED	SW bug, check for AP SW update
	3F		ATI OVERRUN ERROR	
		EP 1 = 00		Av Panel or Connection between Socket Unit and Test equipment
		EP 1 = 01		Av Panel, Top Interface, or interface cable (connection or cable)
	40		ATI NACK	
		EP 1 = 00		Av Panel or Connection between Socket Unit and Test equipment
		EP 1 = 01		Av Panel, Top Interface, or interface cable (connection or cable)
	41		ATI NACK NO BUF	
		EP 1 = 00		Av Panel or Connection between Socket Unit and Test equipment
		EP 1 = 01		Av Panel, Top Interface, or interface cable (connection or cable)
	42		ATI NACK BAD SEQ	
		EP 1 = 00		Av Panel or Connection between Socket Unit and Test equipment
		EP 1 = 01		Av Panel, Top Interface, or interface cable (connection or cable)
	43		ATI NACK OVERRUN	
		EP 1 = 00		Av Panel or Connection between Socket Unit and Test equipment
		EP 1 = 01		Av Panel, Top Interface, or interface cable (connection or cable)
	44		ATI UNKNOWN PROTOCOL	
		EP 1 = 00		Av Panel or Connection between Socket Unit and Test equipment
		EP 1 = 01		Av Panel, Top Interface, or interface cable (connection or cable)
	45		ATI TIMEOUT NO RESPONSE	
		EP 1 = 00		Av Panel or Connection between Socket Unit and Test equipment
		EP 1 = 01		Av Panel, Top Interface, or interface cable (connection or cable)
	46		ATI DRIVER DISABLED	
		EP 1 = 00		Av Panel or Connection between Socket Unit and Test equipment
		EP 1 = 01		Av Panel, Top Interface, or interface cable (connection or cable)
	47		ATI UART DONT EXIST	
		EP 1 = 00		Av Panel or Connection between Socket Unit and Test equipment
		EP 1 = 01		Av Panel, Top Interface, or interface cable (connection or cable)
	48		ATI BREAK SYNC ABORTED	
		EP 1 = 00		Av Panel or Connection between Socket Unit and Test equipment
		EP 1 = 01		Av Panel, Top Interface, or interface cable (connection or cable)

ABC-CENTER V/HENRIKSENS ELEKTRONIK

	49		ATI NO TX ALLOWED	
		EP 1 = 00		Av Panel or Connection between Socket Unit and Test equipment
		EP 1 = 01		Av Panel, Top Interface, or interface cable (connection or cable)
	4A		ATI TLG WAS BREAK SYNCHED	
		EP 1 = 00		Av Panel or Connection between Socket Unit and Test equipment
		EP 1 = 01		Av Panel, Top Interface, or interface cable (connection or cable)
	4B		WRITING_TO_EEPROM BEFORE_INIT	SW bug, check for AP SW update
F8			APPLICATION ERROR	
	00		NO APPLICATION ERROR	No error
	01		ILLEGAL TOP FEP TELEGRAM	SW bug, check for Master Unit/AP SW update
	02		INVALID KEY EVENT	SW bug, check for Master Unit SW update
	0A		ILLEGAL TIMER CONTROL	SW bug, check for AP SW update
	10		POWER FAIL 50MS	Power disconnected while BC2 not in stanby, or SMPS
	11		POWER FAIL 100MS	Power disconnected while BC2 not in stanby, or SMPS
	20		TRANSMISSION BUFFER TIMEOUT	SW bug, check for Socket Unit SW update
	21		ILLEGAL PORT VALUE	Test equipment used wrong port value
	30		TUNER ERROR	
		EP 1 = 02	RDS COMPONENT	(IC402) AM/FM Tuner
		EP 1 = 03	TUNER COMPONENT	(IC200)) AM/FM Tuner
		EP 1 = 04	PLL COMPONENT	(IC200)) AM/FM Tuner
		EP 1 = 05	STEREO DECODER COMPONENT	(IC300)) AM/FM Tuner
		EP 1 = 06	LPC COMPONENT	(IC401)) AM/FM Tuner
		EP 1 = 07	ST EEPROM COMPONENT	(IC203)) AM/FM Tuner
		EP 1 = 08	DAB COMPONENT	DAB Tuner
		EP 2 = 00	NO ST ERROR	Use EP1
		EP 2 = 01	ST WRITE ERROR	Use EP1
		EP 2 = 02	ST READ ERROR	Use EP1
		EP 2 = 03	ST CHKSUM ERROR	Use EP1
		EP 2 = 04	ST READ ERROR ONLY FF	Use EP1
		EP 2 = 05	ST BLOCK LIMIT	Use EP1
		EP 2 = 06	ST EEPROM INVALID BLOCK	Use EP1
	31		DAB_TUNER_FATAL_ERROR	DAB Tuner failure caused by disturbance in mains. Disconnect mains.
	40		RMP STATUS ERROR	
		EP 1+2 = 0001	RMP START UP MEDIA	Use EP3
		EP 3 = 01	RMP NO DISC	No error
		EP 3 = 02	RMP INVALID MEDIA TYPE	No error
		EP 3 = 03	RMP SUBCODE ERROR	No error
		EP 3 = 04	RMP START UP TIMEOUT	DVDM, SW bug check for Master Unit SW update
		EP 3 = 05	RMP TOC ERROR	No error
		EP 3 = 1E	RMP DOORS NOT CLOSED	SW bug, check for AP SW update
		EP 3 = 20	RMP DRIVER NOT STARTED	SW bug, check for Master Unit SW update
		EP 1+2 = 0002	RMP GOTO TRACK	Use EP3
		EP 3 = 06	RMP INVALID TRACK NO	No error
		EP 3 = 07	RMP TRACK NOT FOUND TIMEOUT	DVDM, SW bug check for Master Unit SW update
		EP 1+2 = 0003	RMP STOP	Use EP3
		EP 3 = 08	RMP STOP TIMEOUT	No error
		EP 1+2 = 0004	RMP PAUSE	Use EP3
		EP 3 = 09	RMP PAUSE TIMEOUT	No error

ABO-CENTER V/HENRIKSENS ELEKTRONIK

		EP 1+2 = 0005	RMP PAUSE RELEASE	Use EP3
		EP 3 = 0A	RMP PAUSE RELEASE TIMEOUT	No error
		EP 1+2 = 0006	RMP WIND	Use EP3
		EP 3 = 0B	RMP WIND TIMEOUT	No error
		EP 1+2 = 0007	RMP REWIND	Use EP3
		EP 3 = 0C	RMP REWIND TIMEOUT	No error
		EP 1+2 = 0008	RMP RESET ALL	Use EP3
		EP 3 = 0D	RMP RESET TIMEOUT	No error
		EP 1+2 = 0009	RMP MUTE	Use EP3
		EP 3 = 0E	RMP MUTE TIMEOUT	No error
		EP 1+2 = 000A	RMP DEMUTE	Use EP3
		EP 3 = 0F	RMP DEMUTE TIMEOUT	No error
		EP 1+2 = 000B	RMP RELEASE WIND REWIND	Use EP3
		EP 3 = 10	RMP RELEASE WIND REWIND TIMEOUT	No error
		EP 1+2 = 000C	RMP MARK A	Use EP3
		EP 3 = 11	RMP MARK A ERROR TIMEOUT	No error
		EP 1+2 = 000D	RMP MARK B	Use EP3
		EP 3 = 12	RMP MARK B ERROR TIMEOUT	No error
		EP 1+2 = 000E	RMP RELEASE AB	Use EP3
		EP 3 = 13	RMP AB REPEAT ERROR TIMEOUT	No error
		EP 1+2 = 000F	RMP GOTO ABS TIME	No error
		EP 1+2 = 0012	RMP FOLDER STEP	Use EP3
		EP 3 = 1C	RMP FOLDER STEP TIMEOUT	No error
		EP 1+2 = 0023	RMP SHUTDOWN MEDIA	No error
		EP 3 = 1D	RMP SHUTDOWN MEDIA TIMEOUT	DVDM, SW bug check for Master Unit SW update
		EP 1+2 = 0024	RMP QUEUE NEXT TRACK	No error
		EP 3 = 06	RMP INVALID TRACK NO	No error
		EP 3 = 07	RMP TRACK NOT FOUND TIMEOUT	DVDM, SW bug check for Master Unit SW update
		EP 1+2 = 0105	RMP START DRIVER	Use EP3
		EP 3 = 22	RMP START DRIVER TIMEOUT	DVDM
		EP 3 = 00	RMP NO RMP ERROR	No error
		EP 3 = 17	RMP COMMUNICATION ERROR	SW bug, check for Master Unit/AP SW update
		EP 3 = 1E	RMP DOORS NOT CLOSED	Check door and loader mechanics, SW bug check for Master Unit SW update
		EP 3 = 20	RMP DRIVER NOT STARTED	SW bug, check for Master Unit/AP SW update
		EP 3 = 21	RMP BUSY	No error
	41		RMP TRANSMIT QUEUE FULL	SW bug, check for AP SW update
	42		RMP DD UNKNOWN COMMAND	SW bug, check for AP SW update
	50		OUT OF DISPLAY REPOSITORIES	SW bug, check for AP SW update
	51		DISPLAY REPOSITORY OVERRUN	SW bug, check for AP SW update
	60		CABLE DATA UNSTABIL	Check connection between Socket Unit and Master Unit, AV Panel, Top interface, interface cable.
	61		PING PONG FAILURE	Check connection between Socket Unit and Master Unit, AV Panel, Top interface, interface cable.
	62		TOP RETRANS FAILED	Check connection between Socket Unit and Master Unit, AV Panel, Top interface, interface cable.
	70		DOORS BLOCKED OPENING	Check doors mechanical
	71		DOORS BLOCKED CLOSING	Check doors mechanical
	72		DOORS NOT READY ERROR	Check doors mechanical. Check for AP SW update
	73		SOF DISP EXCEED SOF DISP DD TELEGRAM TYPE	SW bug, check for AP SW update
	74		OUT OF DISP DD TELEGRAMS	SW bug, check for Master Unit SW update
	75		TOP ERROR	

ABO CENTER V/HENRIKSENS ELEKTRONIK

		EP 1 = 00	BRC NOT COMPLETED	Check connection between Socket/ Master Unit, AV Panel, Top interface, interface cable
		EP 1 = 01	DENIED BRC REQUEST	Check connection between Socket/ Master Unit, AV Panel, Top interface, interface cable
		EP 1 = 02	BRC DENIED	Check connection between Socket/ Master Unit, AV Panel, Top interface, interface cable
		EP 1 = 09	CABLE DATA UNSTABIL	Check connection between Socket/ Master Unit, AV Panel, Top interface, interface cable
		EP 1 = 11	PIO CMD QUEUE FULL	SW bug, check for Master Unit SW update
		EP 1 = 12	ATI CI QUEUE FULL	SW bug, check for Master Unit SW update
		EP 1 = 13	DVD COMM TIMO	DVDM
F9			UNDECLARED_IRQ_ERROR	SW bug, check for AP SW update

ABO-CENTER V/HENRIKSENS ELEKTRONIK

When leaving the **NVMEM** Error List menu user is prompted to clear the list.

```
...NVMEM
Clear Error List?
Clear  Keep
^-------------
```

Select Clear to permanently delete the list, or Keep to not delete the list.

3. Product ID

```
...Product ID
1  Item No        xxxxxxx
2  Type No          YYYY
3  Serial No     zzzzzzzz
4  PIN                OK
```

If Error in Master PIN code PIN = Err, else PIN = OK.

4. Service Counters

```
...Service Counters
1  Time Standby     1100
2  Time Radio         10
3  Time CD             5
4  Time AUX            0
5  Time active ML      2
6  Time TP Enabled     3
7  Times Standby       3
8  Times Booted       23
```

*NOTE: Unit of Time is in *10hours

Time Standby: Time unit is placed in standby x10hours
Time Radio: Time Radio source is active x10hours
Time CD: Time CD source is active x10hours
Time AUX: Time AUX source is active x10hours(TP=Timer Play)
Time active ML: Time source from ML is active x10hours
Time TP Enabled: Time unit has TP enabled x10hours
Times Standby: Times the unit is placed in standby
Times Booted: Times the µP is booted (times disconnected/connected from mains)

5. Default Settings

```
...Default Settings
Set Default Settings?
Yes  No
^------
```

6. Keyboard Test

```
...Keyboard Test

Key: CNTL_STEP_UP_KEY
Data: 0
```

Valid Key Names are

CIFFER_0_KEY	REWIND_KEY
CIFFER_1_KEY	GO_KEY
CIFFER_2_KEY	CNTL_WIND_KEY
CIFFER_3_KEY	CNTL_REWIND_KEY
CIFFER_4_KEY	CNTL_STEP_UP_KEY
CIFFER_5_KEY	CNTL_STEP_DW_KEY
CIFFER_6_KEY	DISC_KEY
CIFFER_7_KEY	RADIO_KEY
CIFFER_8_KEY	MENU_KEY
CIFFER_9_KEY	LOAD_KEY
STEP_UP_KEY	STANDBY_KEY
STEP_DW_KEY	EXIT_KEY
WIND_KEY	VOLUME_KEY

For VOLUME_KEY the Data field is also used.
Data show the last data different from 0 received for a VOLUME_KEY

```
...Keyboard Test

Key: VOLUME_KEY
Data: +4
```

The Data indicate the NOF steps the volume would be regulated during normal operation.

To leave the Keyboard Test press STOP (Beo4).

7. Loader Lock

This menu can lock Unlock the Loader.
When the Loader is Locked, the Master Unit will not open loader and clamper, when load key is activated, used so CD's are unapproachable in shops.

```
...Loader Lock
Current Mode: Unlocked
Unlocked  Locked
^---------------
```

*NOTE: Loader Lock is Default Unlocked

ABO-CENTER V/HENRIKSENS ELEKTRONIK

8. DAB service display

DR ROCK	
227. 360	VB003
CHN 12C	SQ002
	160 KB/S

- Program name
- Frequency
- "VB" Viterbi error rate (0 to 128). Performs error-correction of the received noise desturbed signal
- "SQ" Signal Quality
  0 - 15: Good reception
  16 - 30: Borderline reception
  31 - 80: Poor reception
- The bit rate (in kilobit/second) indicates the audio compressing level of the particular program. A low resolution (32 to 112 KB/S) indicates a high audio compressing level meaning poor audio quality (most used for e.g. news programs). A high resolution (128 to 384 KB/S) indicates a low audio compressing level meaning high audio quality (most used for e.g. music programs).

32 KB/S	128 KB/S
48 KB/S	160 KB/S
56 KB/S	192 KB/S
64 KB/S	224 KB/S
80 KB/S	256 KB/S
96 KB/S	320 KB/S
112 KB/S	384 KB/S

ABO-CENTER V/HENRIKSENS ELEKTRONIK

Service tips

Doing fault searching and measurements, there is some special features you should be aware of.

1. In order to power up, the Master Unit and Socket Unit needs to be connected thrugh the interface cable, due to the fact that the main SMPS is placed in the Socket Unit, along with the RGB Video processor and microprocessor.

2. Right before signals from the Master Unit and Socket Unit goes into the interface cable, they are converted into current signals. If you need to measure the signals going in and out the interface cable, you need to measure before or after the converters.

3. All SMPS´s in the Master Unit is synchronized along with the SMPS´s in the Socket Unit. But the main SMPS in the Socket Unit is only synchronized, along with the rest, when the BeoCenter 2 is receiving AM signal in RADIO mode. If the synchronizing isn't working, it can create a lot of noise in the AM reception.

4. The CD are not able to start up when the keyboards are open or dismantled, due to exposure of the laser pickup. A little magnet should be used to activate the hall sensor. Disconnect the BeoCenter 2 from the mains, place the magnet and then connect the BeoCenter 2 to the mains again. After start up, the magnet can be removed, and the hall sensor will still detect the keyboards as closed, which give full functionality with the keyboards open/detached, until load is pressed.
See page 5.19.

5. If measurements need to be done on the outlet plugs on the Socket Panel, remember to use the GND in the same plug you are about to measure in. The GND level can vary from plug to plug.

6. All data communication to the CD interface is done with signal levels on 3.3 volts, if this level vary, it can cause data failure.

7. The VFD display has an auto contrast function, if this fail, the light in the display can vary from very bright to almost black.

8. The interface cable between the Master Unit and the Socket Unit is very sensitive to sharp bends or any other large mechanical influence. Damage can result in poor sound/picture quality or fault in the data communication between the Master Unit and Socket Unit.

9. If one of the two IR-modules fails, the IR sensitivity will be reduced.

10. All analogue audio processing is done in the analogue Audio engine (PCB50). The digital SPDIF signal is not going through any processing, beside it is DC levelled on AV panel DAB (PCB).

ABO-CENTER V/HENRIKSENS ELEKTRONIK

ABO-CENTER V/HENRIKSENS ELEKTRONIK

Replacement of modules

Modules that can be replaced

Master unit

Replace Keyboard left 5.4
Replace Keyboard right 5.5
Replace Display 5.6
Replace Clamper 5.7
Replace Clamper cover 5.8
Replace Gearbox 5.9
Replace CD PCB 5.10
Replace CD unit 5.12
Replace PCB2, Top Interface 5.14
Replace Clamper drive belt 5.15
Replace Clamper motor 5.16
Replace Gearbox drive belt 5.17
Replace Gearbox motor 5.18
Servicetest position 5.19

Socket unit

Replace PCB50, Analog sound engine 5.21
Replace PCB85, Tuner module 5.22
Replace PCB60, Switch mode power supply 5.23
Replace PCB6, Microprocessor 5.24
Replace PCB10, Socket panel 5.25
Replace PCB37, DAB module 5.26

ABO-CENTER V/HENRIKSENS ELEKTRONIK

Adjusting the Keyboards

After replacing parts in the Master unit, it may be nessasary to adjust the Keyboards. There are two adjustments:

1. Distance between Keyboards and Display.
2. Distance between Keyboards and bottom.

To adjust the distance between the display and the Keyboards (a), use the screw 1 (Located on the back).
Use the special tool delivered with the gearbox.

To adjust the distance between the lids and the bottom (b), use the adjustments screws 2 and 3. (Located on the back).
Use a 3mm allen key for the adjustment.

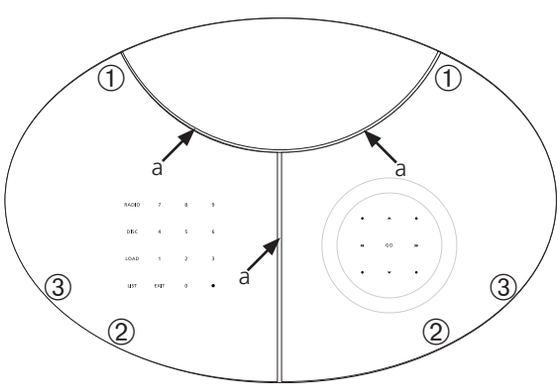

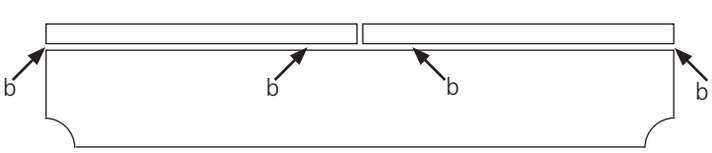

Testing a PCB6 (µPH8-4) Flash version module

It is possible to use a µPH8-4 module from a similar type of product for test purpose, but the serial no. and other important adjusting settings will not match the product correctly. Therefore it is important to replace the original µPH8-4 module after a test.
The software programable microcomputer version (flash of both APPLICATION and EEPROM software) can be recognized by having no IC sockets on the PCB.
Another way to identify if a product has the flash version module, is to check if the PC ServiceTool has APP software flash menus for the specific product.

Replacing the Main microcomputer PCB6 (µPH8-4) Flash version

When replacing the updated PCB6 µPH8-4, it is necessary to read out existing settings and flash these back into a new PCB6 service module by means of the PC ServiceTool (can be downloaded from the Retail System/BeoWise section).
This procedure is necessary because the µPH8-4 module contains valuable product related data such as serial no., PIN-code, monitor settings, program settings etc..
If you have programmed a new service µPH8-4 module, the new PCB6 can only be used for this specific product, and it must be returned to Bang & Olufsen to be erased again.

Note

Always disable the PIN-code from the product before reading out data from µPH8-4 module, or programming a new service µPH8-4 module.
This because the PIN-code system may activate during the flash process.

Not possible to read out product data (or software version) from the Main microcomputer PCB6 (µPH8-4) Flash version

Check the 5V supply and the signal path for the µPH8-4 module.
In cases where the PCB6 acts 'dead', it is necessary to have a new PCB6 pre-programmed from Bang & Olufsen with the correct serial no. for the specific product, otherwise it will not work.
Please contact Bang & Olufsen.

The PC ServiceTool

Along with a Cable kit for ServiceTool (3375397), Product Interface Tool (P.I.T.) (3375055) and eventually USB->RS232 converter (3375151) it is possible to flash update the Pioneer FEP software, and the Master Unit FEP software.
The original interface cable is connected to the Socket Unit, and is going to the P.I.T. box. From the P.I.T. box a special service interface cable with grey plugs, goes to the Master Unit. The PC with the ServiceTool software is connected to the P.I.T. box. On the P.I.T. box, you are able to select which software you want to flash update via a switch.
The PC ServiceTool software can be downloaded from the Retail System/BeoWise section, and is updated several times a year. Always use the latest ServiceTool version on you personal computer.

ABO-CENTER VHENRIKSENS ELEKTRONIK

➢1
- Remove cable

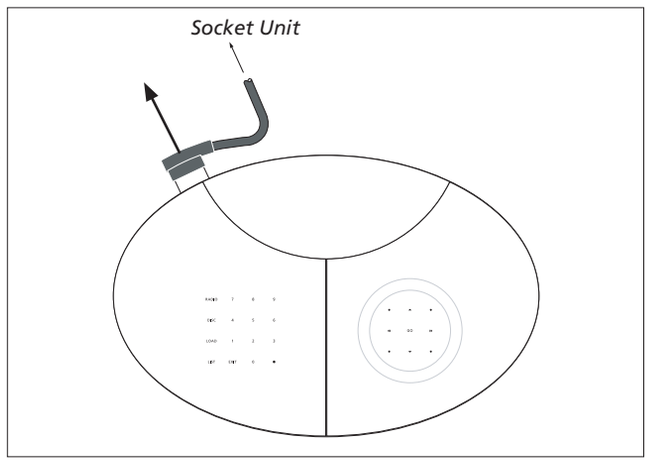

➢2
- Loosen excentric locks

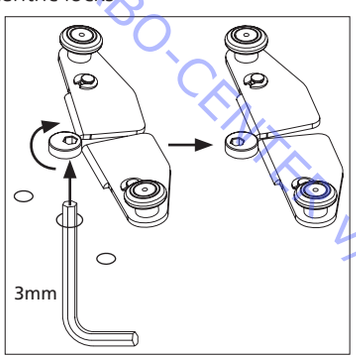

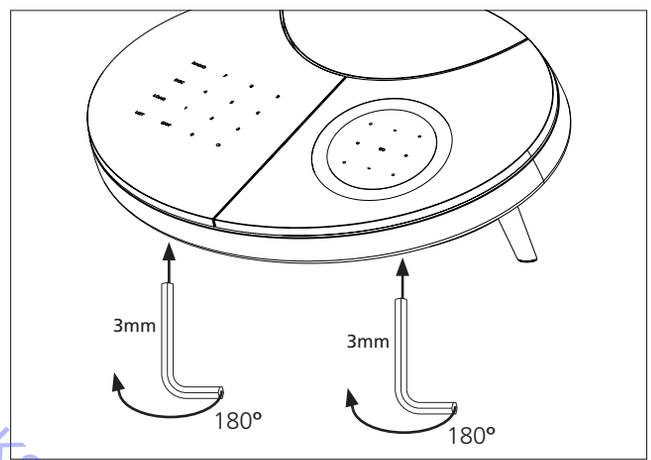

ABO-CENTER W/HENRIKSENS ELEKTRONIK

➢3
- Lift off Keyboards

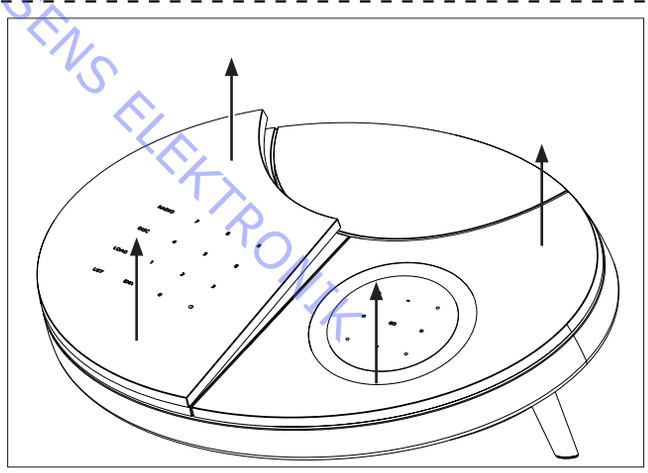

- Place keyboards as shown - with cables attached

Open cableholders

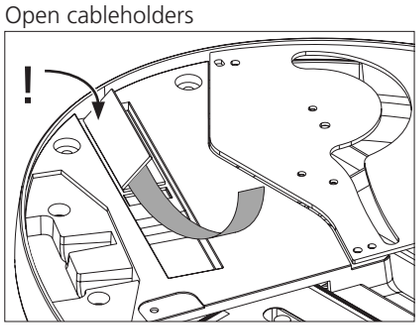

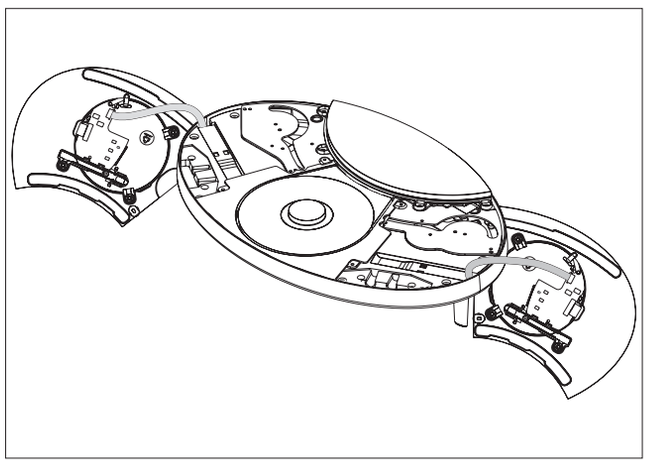

➢1
- Remove cable

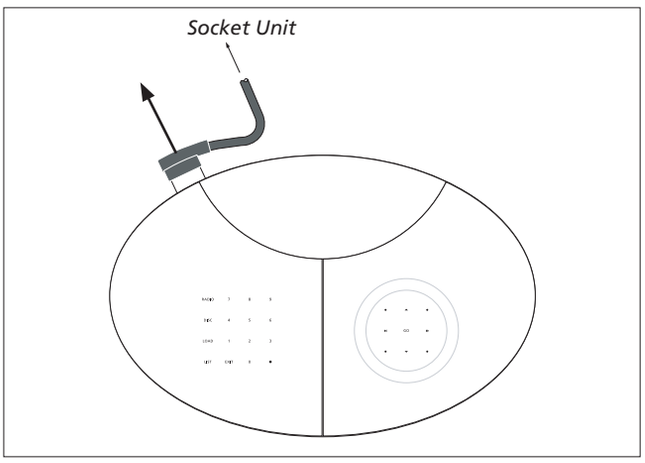

➢2
- Loosen excentric lock

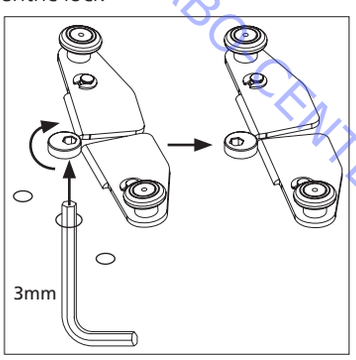

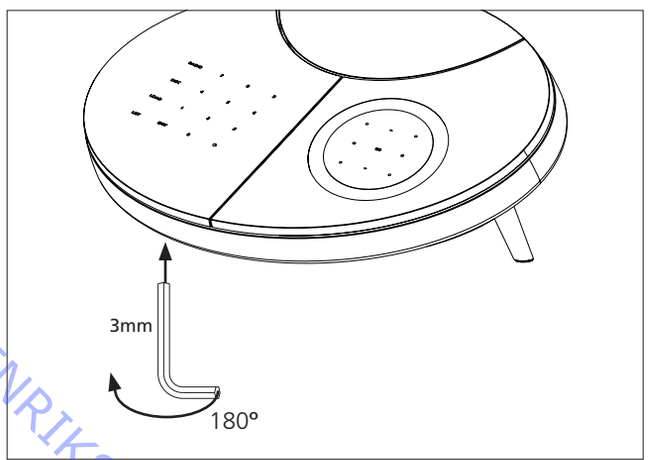

ABC CENTER V/HENRIKSENS ELEKTRONIK

➢3
- Lift off Keyboard

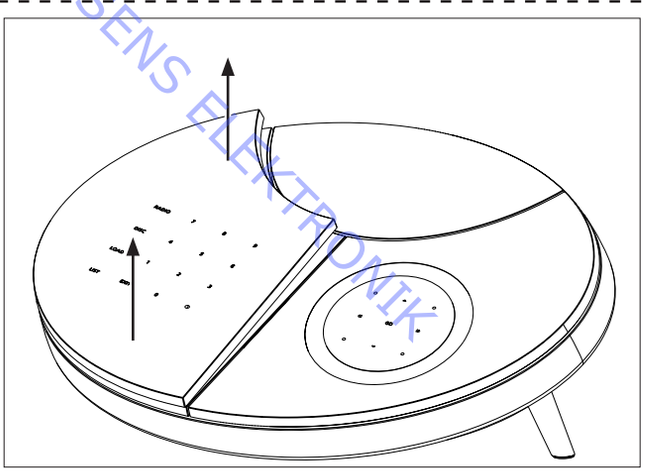

➢4
- Remove cable on backside of Keyboard

Cable lock!!

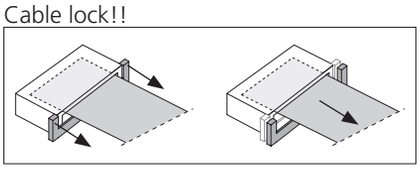

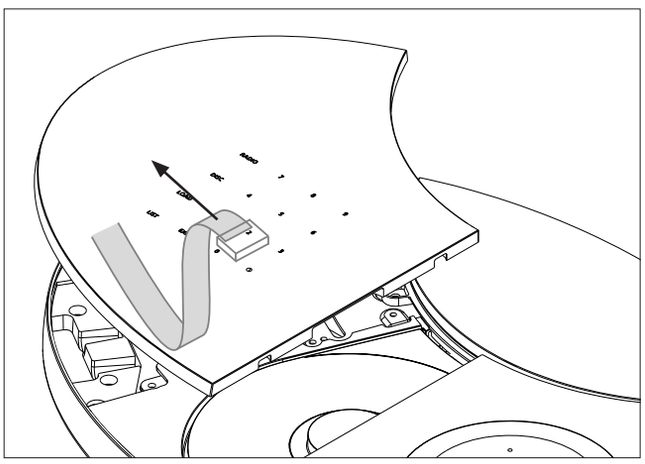

➢1
- Remove cable

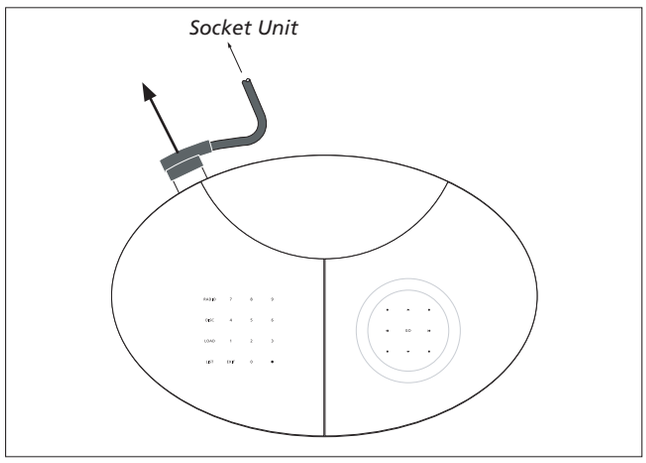

➢2
- Loosen excentric lock

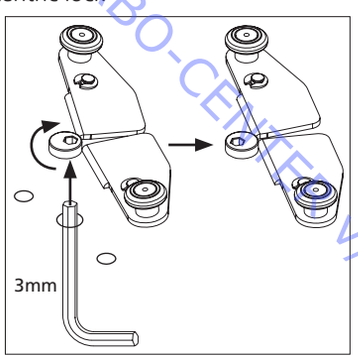

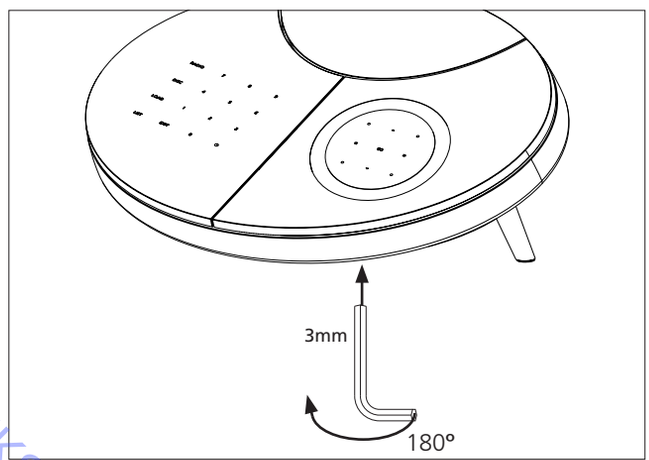

ABO-CERTIFIED W/HENRIKSENS ELEKTRONIK

➢3
- Lift off Keyboard

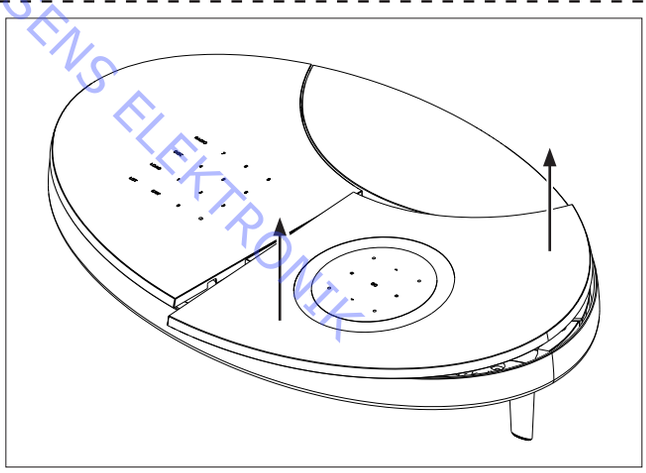

➢4
- Remove cable on backside of Keyboard

Cable lock!!

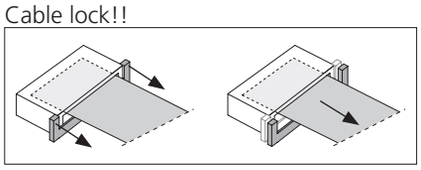

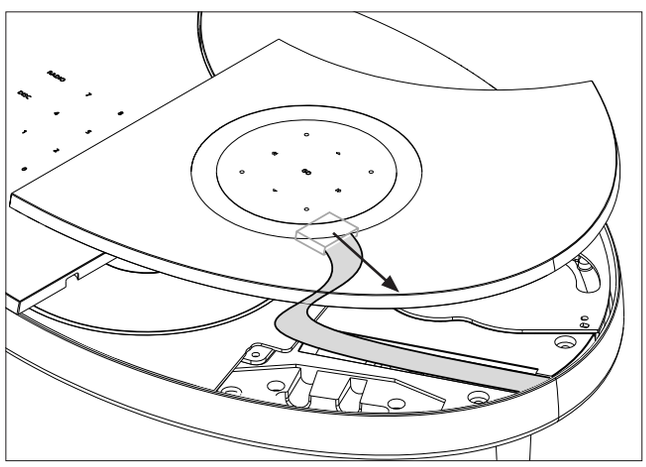

☞ 5.3 BeoCenter 2 in service position

- Remove screws

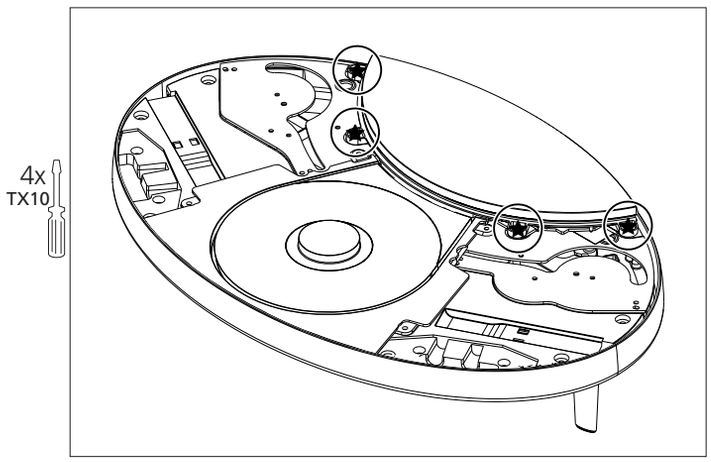

- Remove cables connecting the Display

Cable lock!!

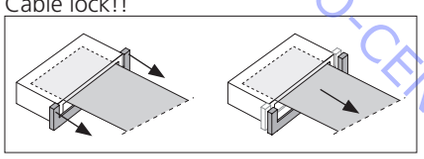

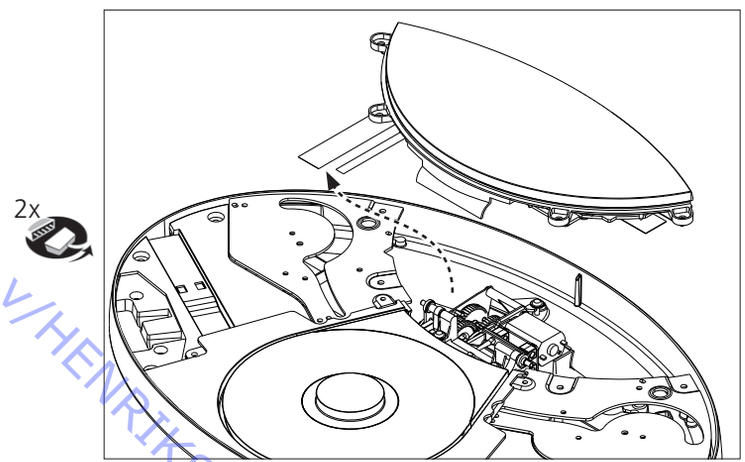

- Disassembly of display!

- Remove screws

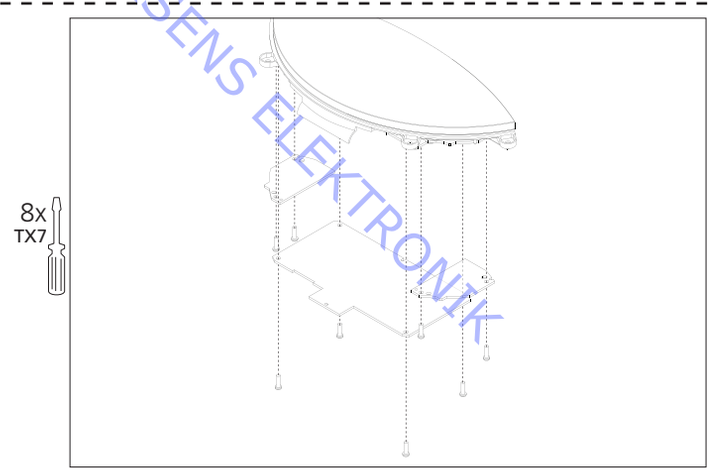

ABO-CENTER V/HENRIKSENS ELEKTRONIK

☞ 5.3 BeoCenter 2 in service position
☞ 5.6 Remove Display

- Remove screws

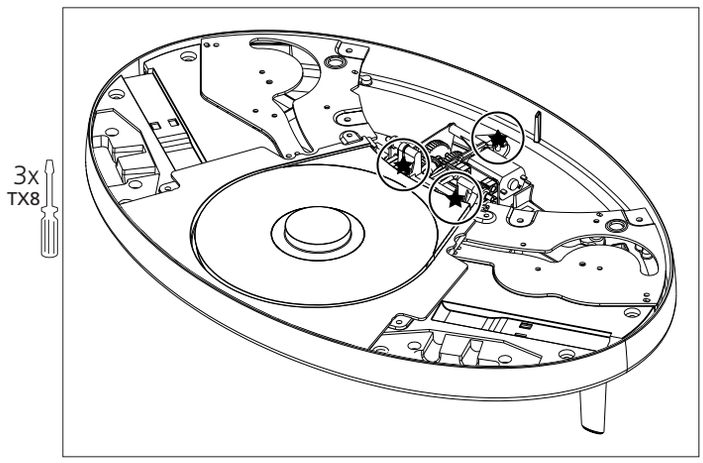

- Remove cables

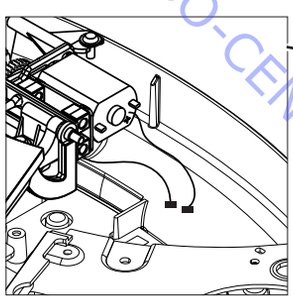

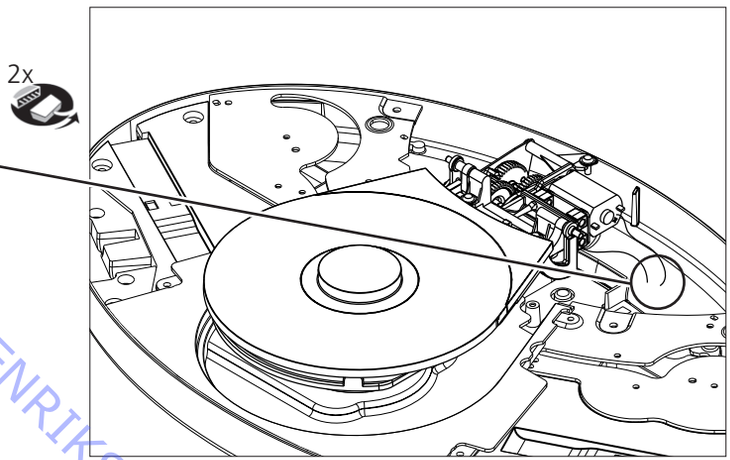

- Remounting Clamper!
- Place a CD in clamper and allign as shown

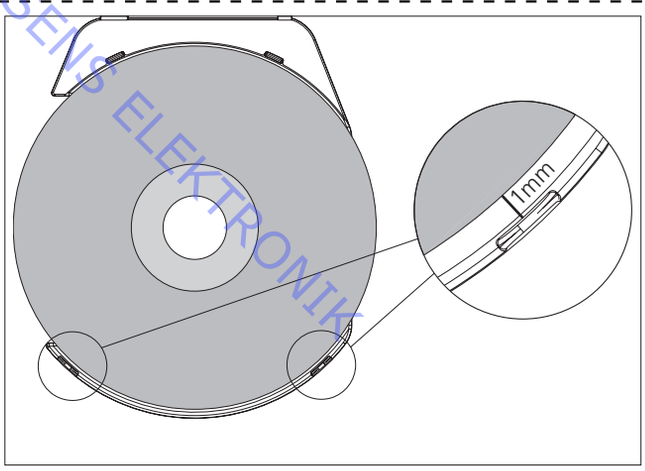

- Fasten screws when clamper is correctly alligned

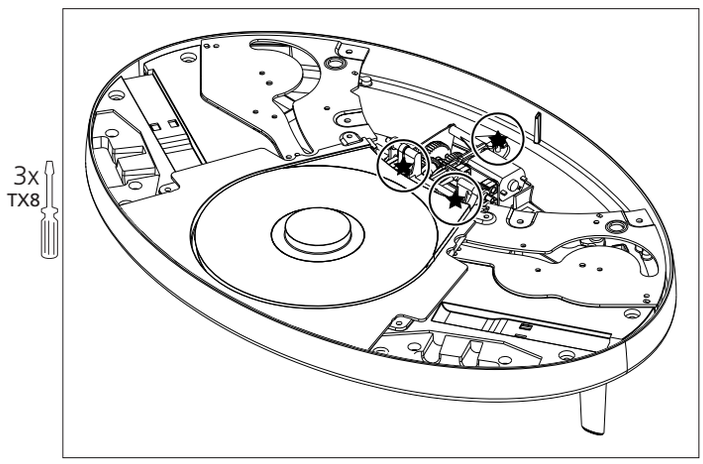

ABO-CENTER V/HENRIKSENS ELEKTRONIK

☞ 5.3 BeoCenter 2 in service position
☞ 5.6 Remove Display
☞ 5.7 Remove Clamper

- Remove screws

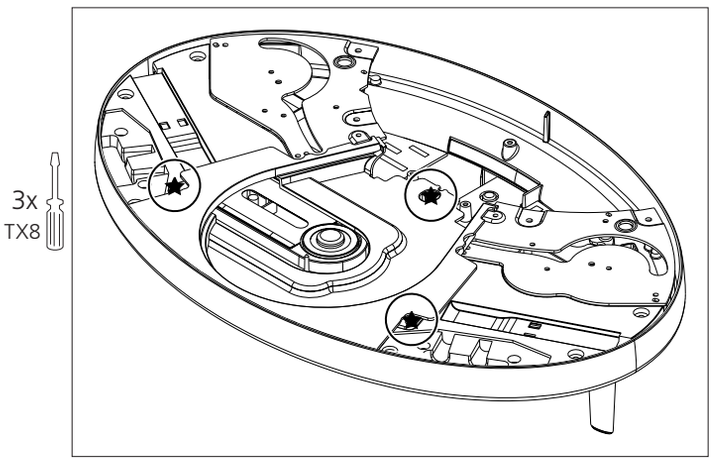

- Lift and pull off clamper cover

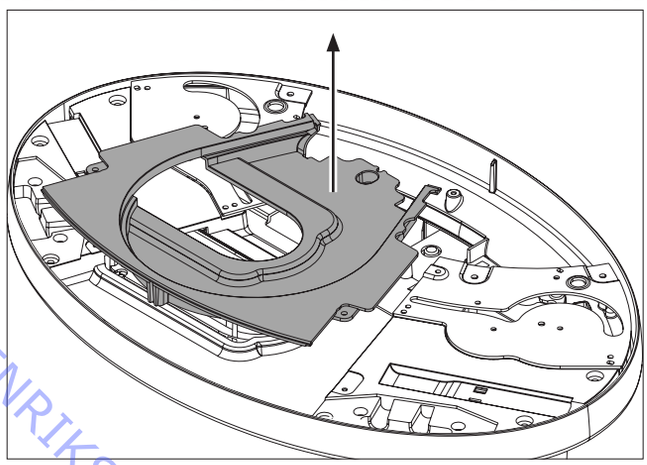

ABO-CENTER V/HENRIKSENS ELEKTRONIK

☞ 5.3 BeoCenter 2 in service position
☞ 5.6 Remove Display
☞ 5.7 Remove Clamper
☞ 5.8 Remove Clamper cover

- Remove screws

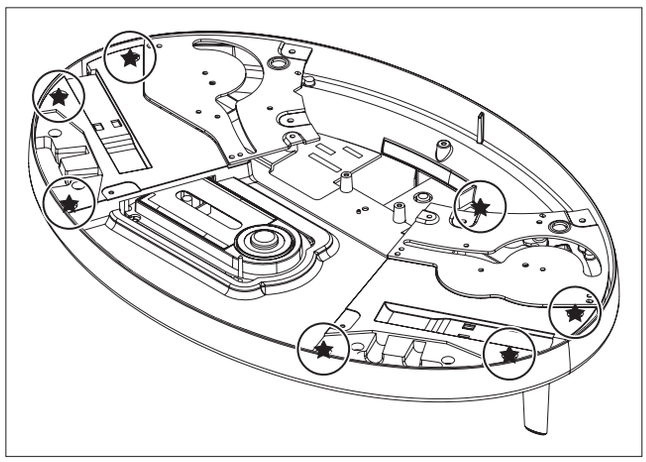

- Remove plug

Cable lock!!

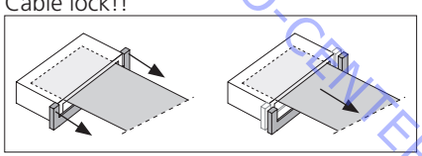

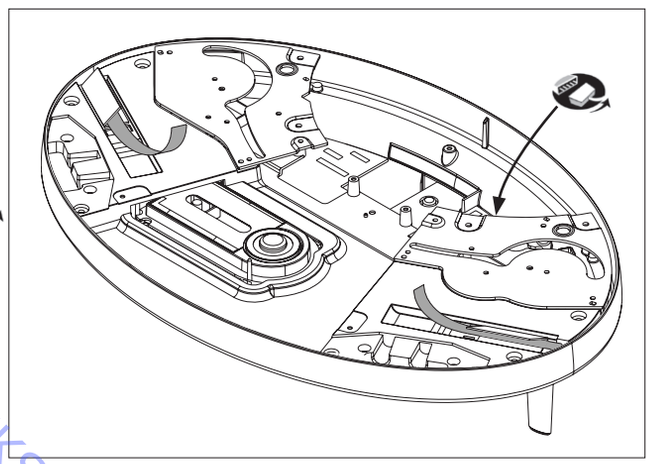

- Lift off Gearbox

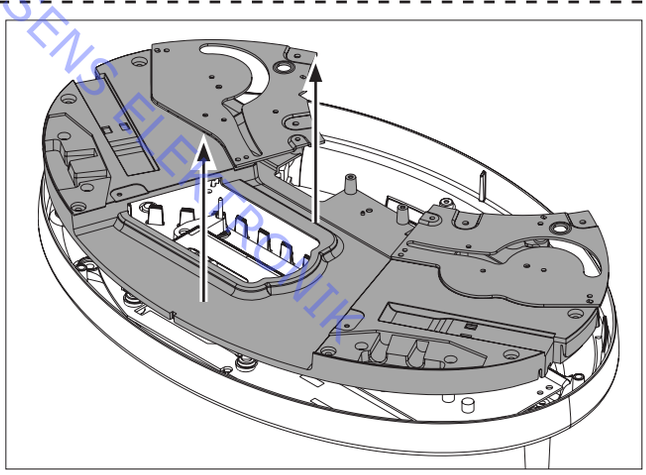

ABO-CENTER V/HENRIKSENS ELEKTRONIK

☞ 5.3 BeoCenter 2 in service position
☞ 5.6 Remove Display

- Remove screws as shown

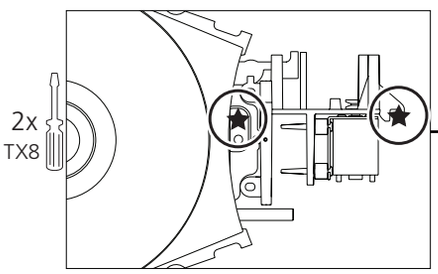

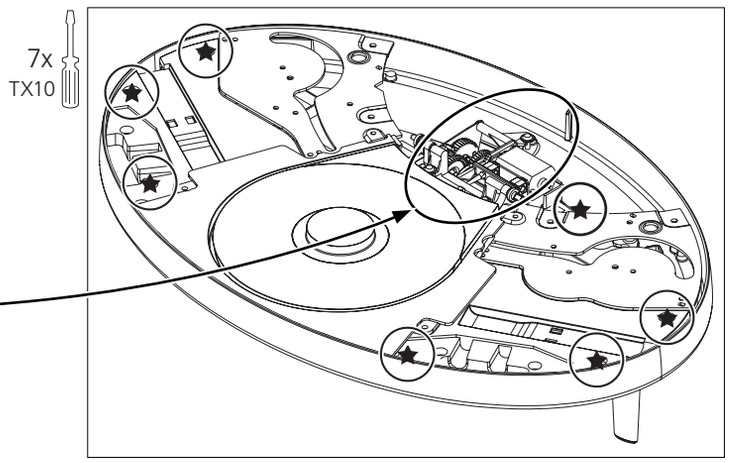

- Remove cables

Cable lock!!

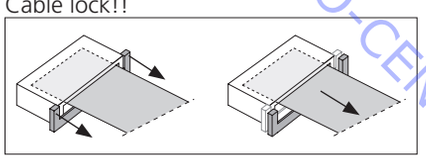

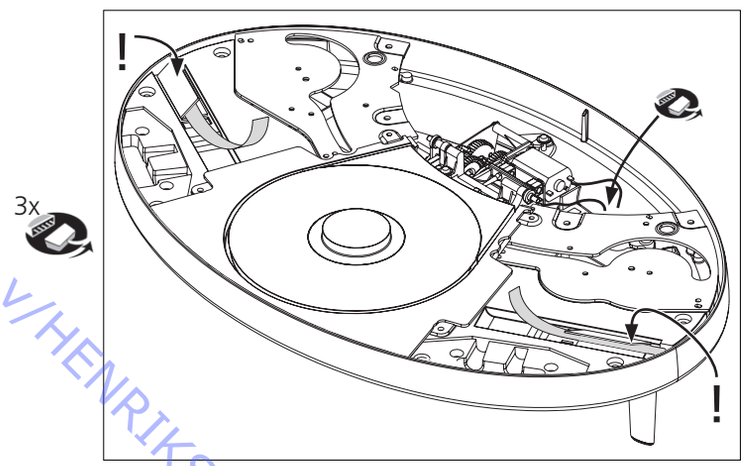

- Lift off gearbox including clamper

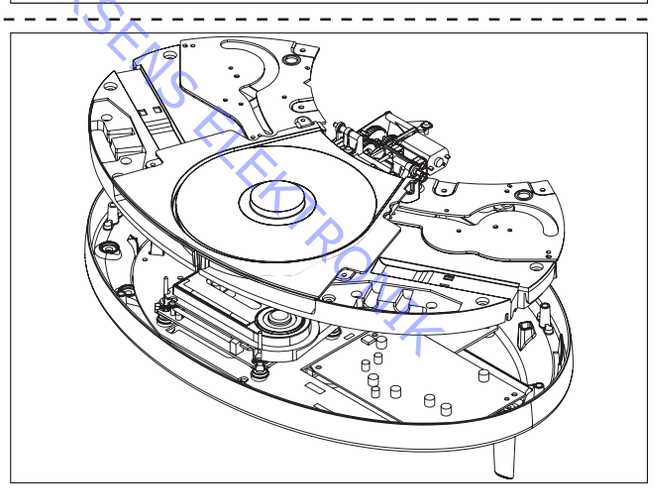

- Remove plugs

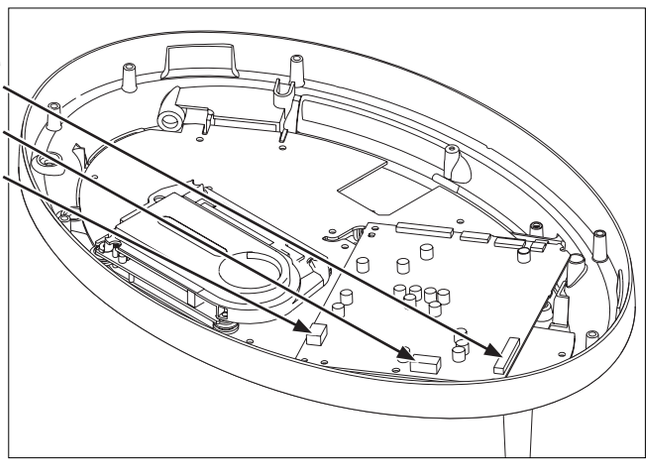

ABO-CENTER V/HENRIKSENS ELEKTRONIK

- Remove screw

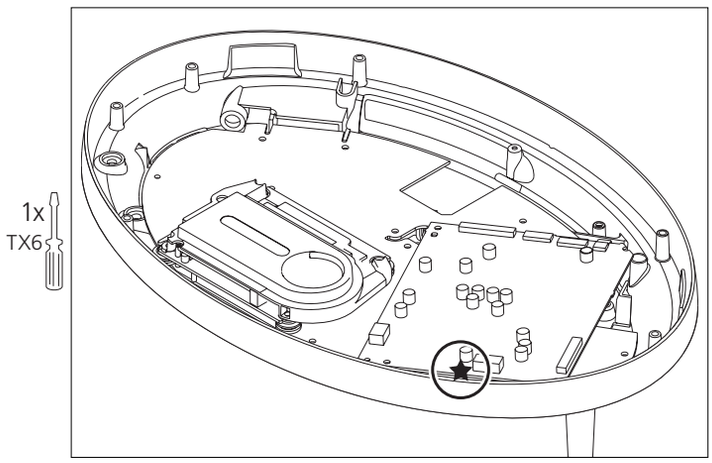

- Remove plugs

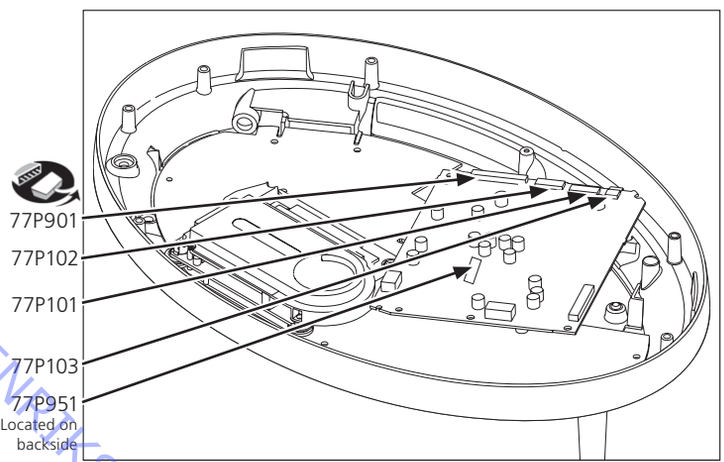

ABO-CENTER V/HENRIKSENS ELEKTRONIK

☞ 5.3 BeoCenter 2 in service position
☞ 5.6 Remove Display

- Remove screws as shown

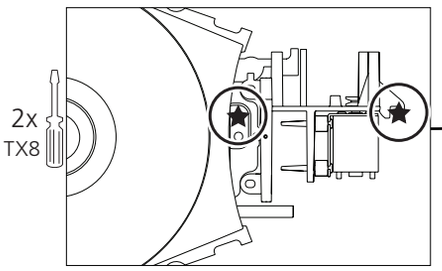

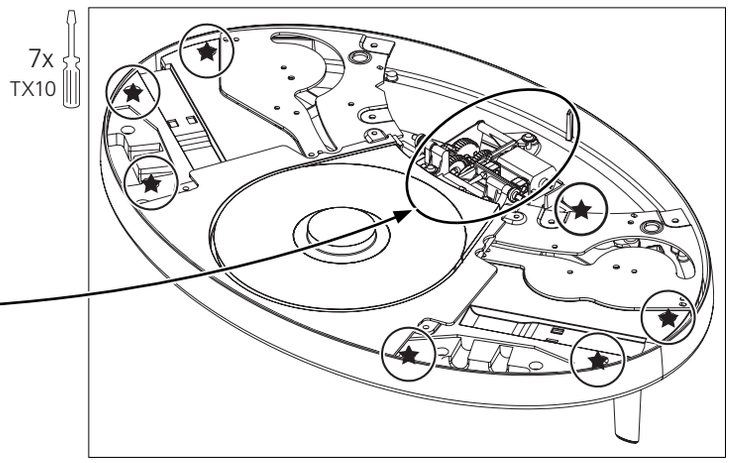

- Remove cables

Cable lock!!

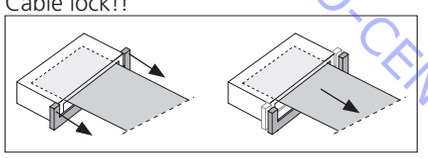

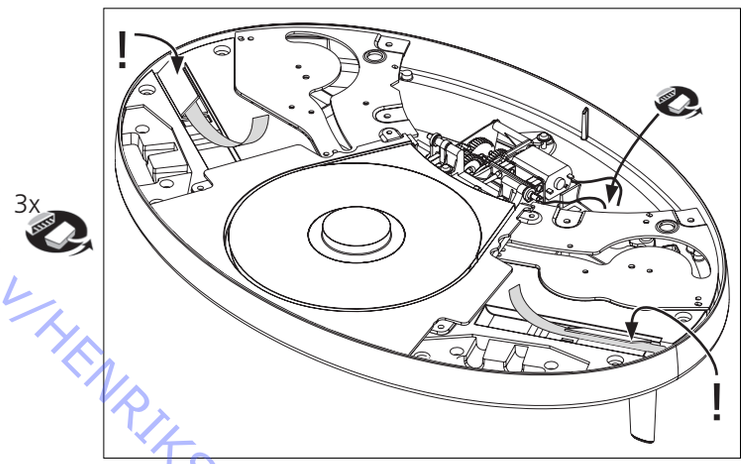

- Lift off gearbox including clamper

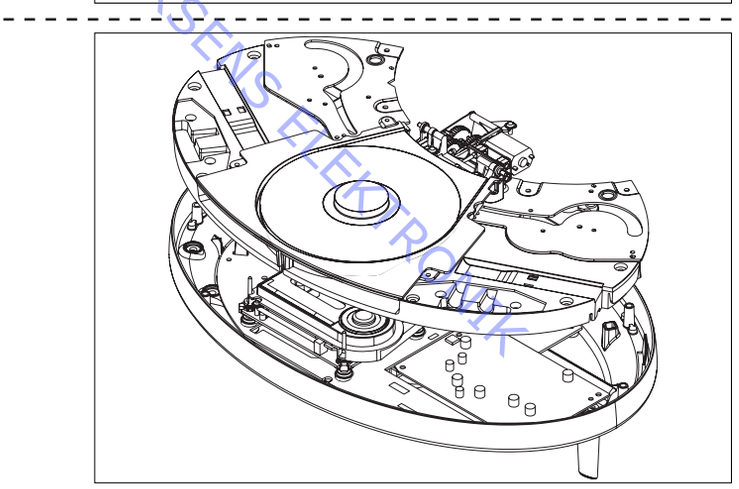

- Remove plugs

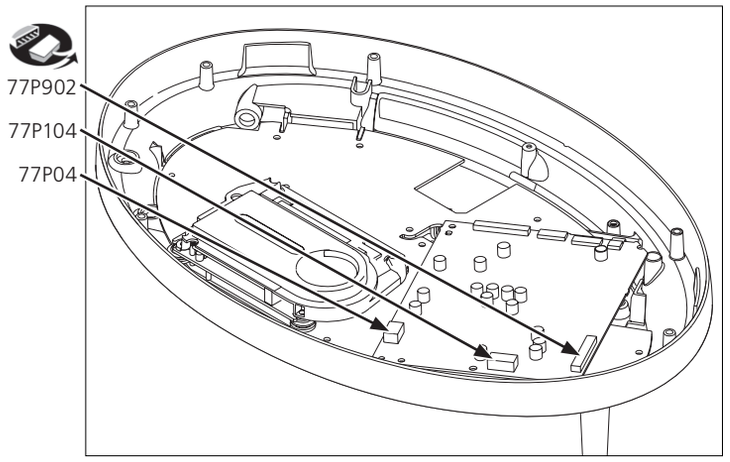

ABO-CENTER V/HENRIKSENS ELEKTRONIK

- Remove screw

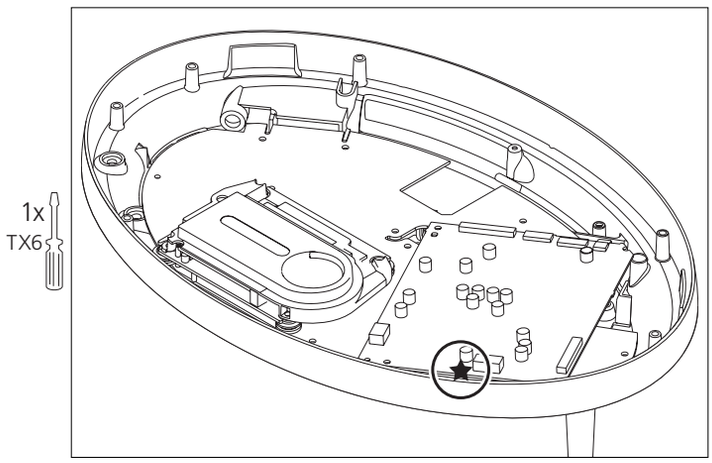

- Remove plugs

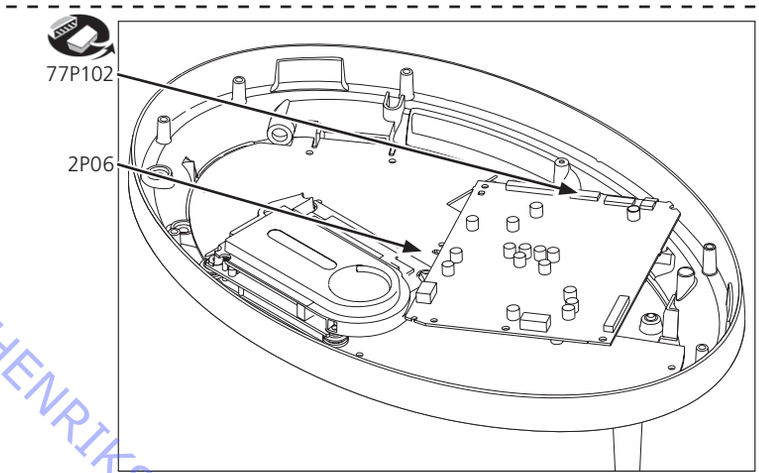

- Carefully remove CD unit
- Remove cable

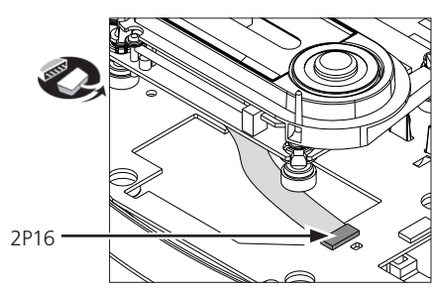

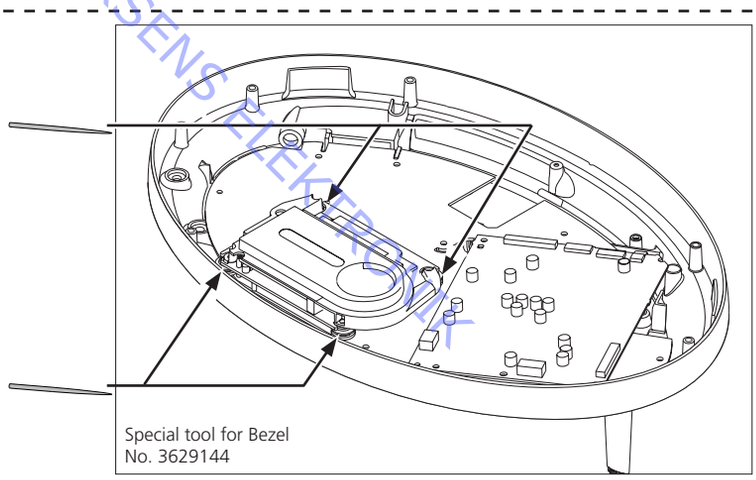

ABO-CENTER V/HENRIKSENS ELEKTRONIK

☞ 5.3 BeoCenter 2 in service position
☞ 5.6 Remove Display
☞ 5.10 Remove CD PCB
☞ 5.12 Remove CD unit

- Remove screws

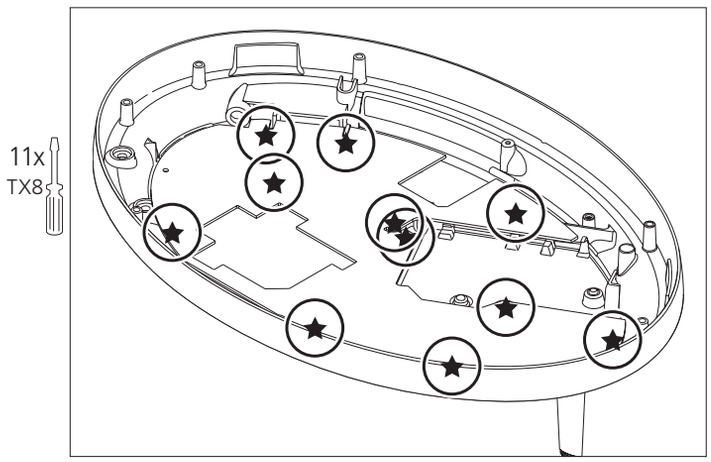

- Remove cables

Cable lock!!

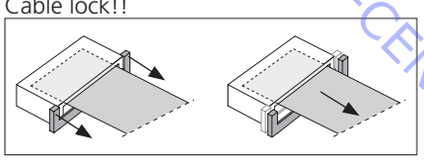

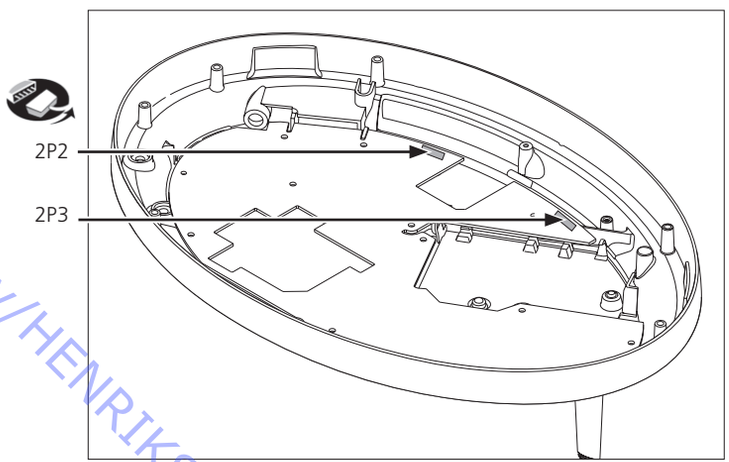

- Lift off PCB2

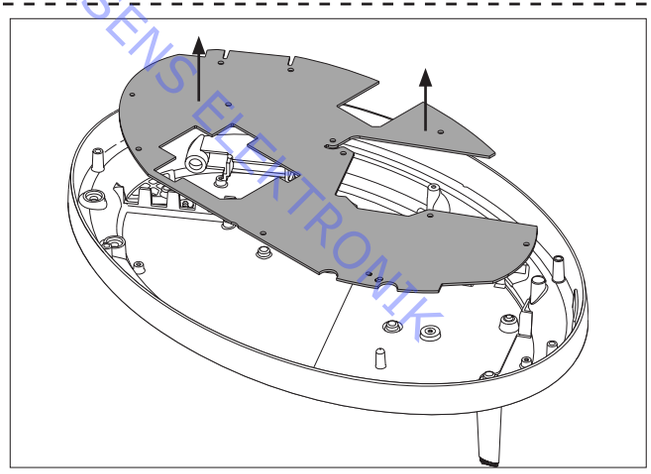

ABO-CENTER V/HENRIKSENS ELEKTRONIK

☞ 5.3 BeoCenter 2 in service position
☞ 5.6 Remove Display
☞ 5.7 Remove Clamper

- Remove screws

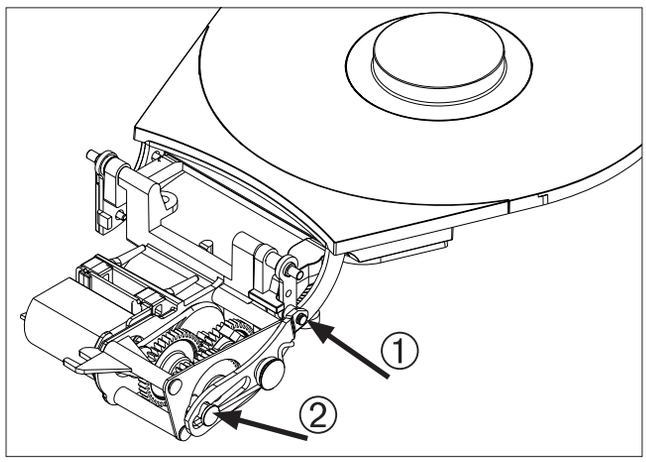

- Remove split

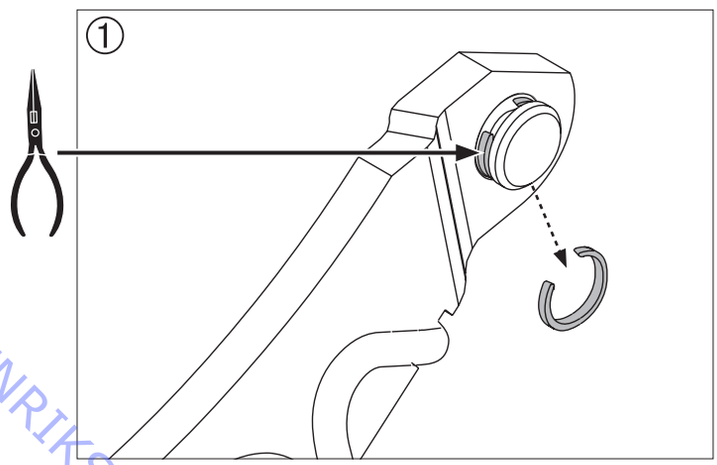

- Loosen spring lock

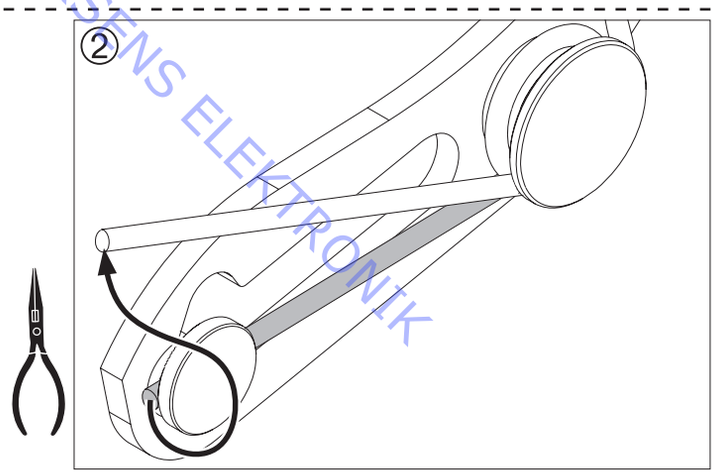

- Remove screws
- Dismantle gear

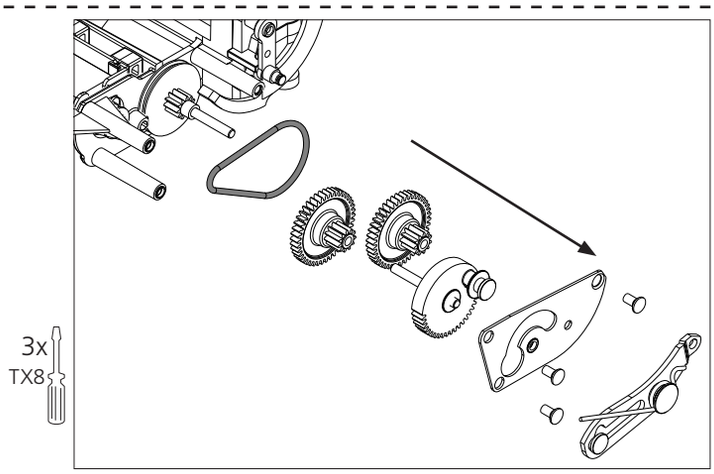

ABO-CENTER V/HENRIKSENS ELEKTRONIK

☞ 5.3 BeoCenter 2 in service position
☞ 5.6 Remove Display
☞ 5.7 Remove Clamper
☞ 5.15 Remove Drive belt

- Remove motor by cutting off dampers

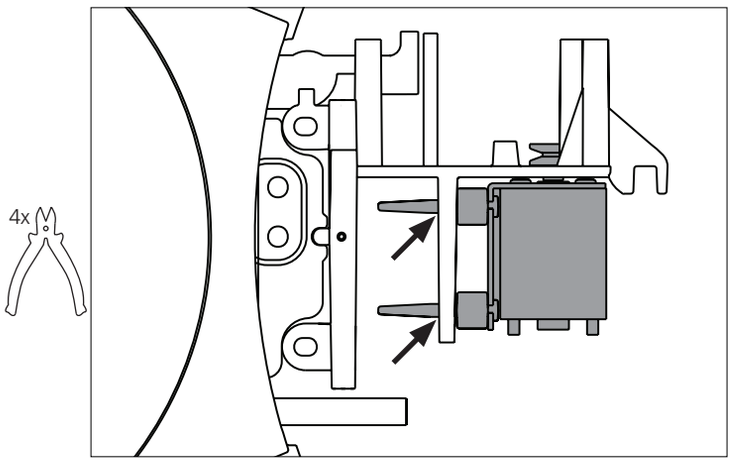

ABO-CENTER V/HENRIKSENS ELEKTRONIK

☞ 5.3 BeoCenter 2 in service position
☞ 5.6 Remove Display

- Remove screws

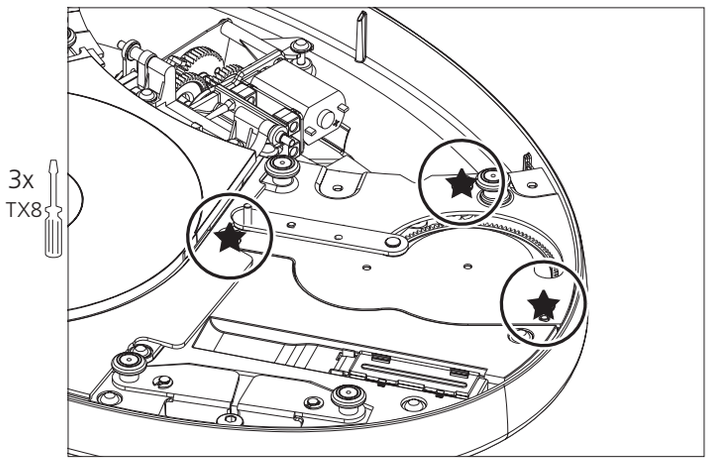

- Disassemble as shown

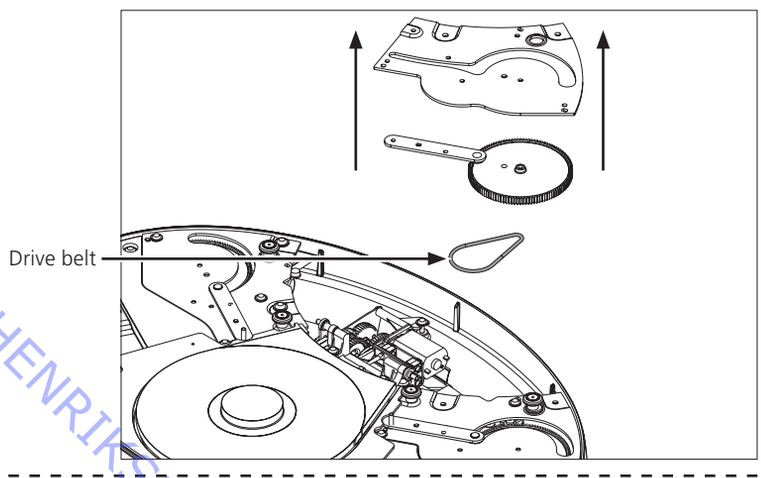

- When remounting, holes must be alligned

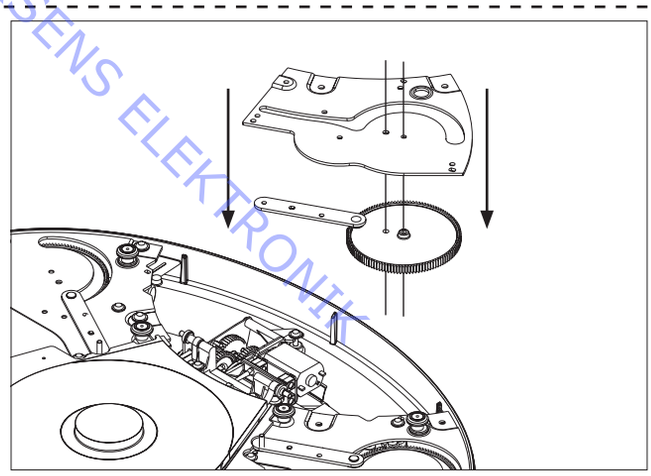

ABO-CENTER V/HENRIKSENS ELEKTRONIK

☞ 5.3 BeoCenter 2 in service position
☞ 5.6 Remove Display

- Remove screws

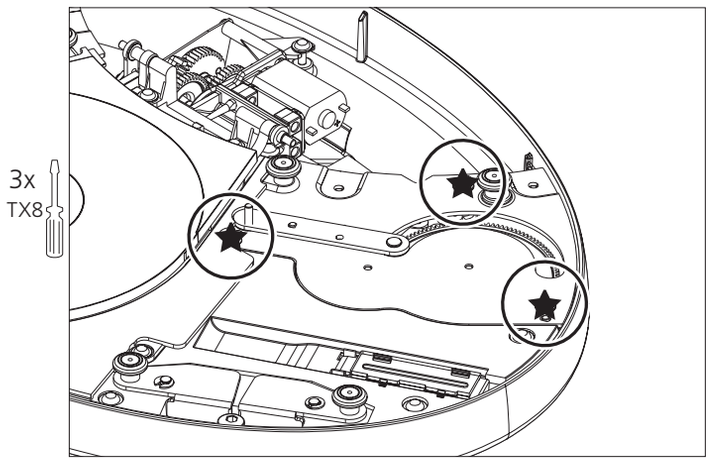

- Disassemble as shown
  Remove cable for motor

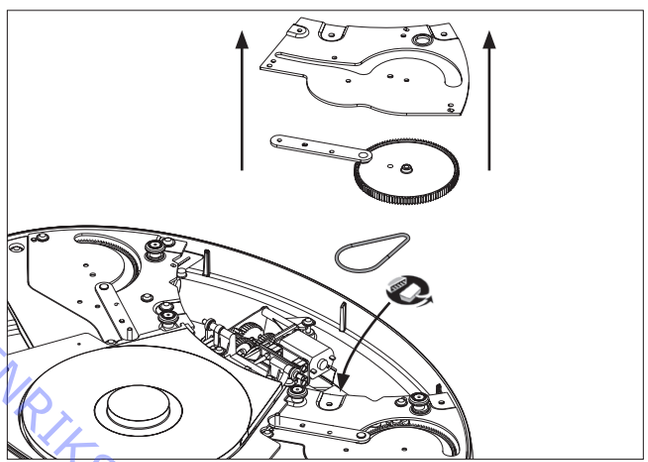

- Remove gearwheel

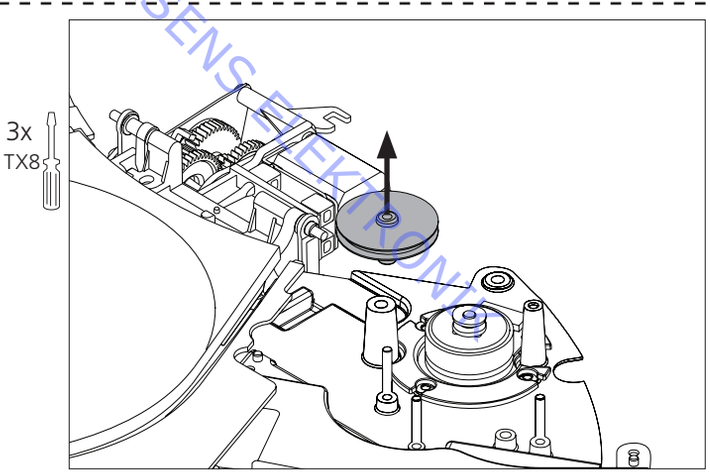

- Remove screws and pull off motor

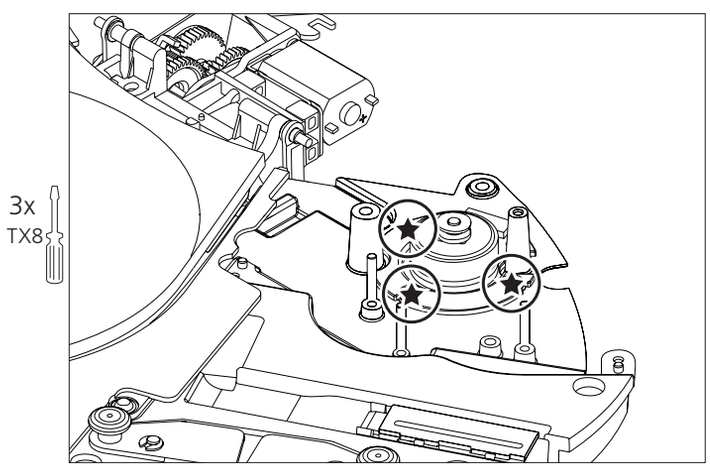

ABO-CENTER v/HENRIKSENS ELEKTRONIK

☞ 5.3 BeoCenter 2 in service position

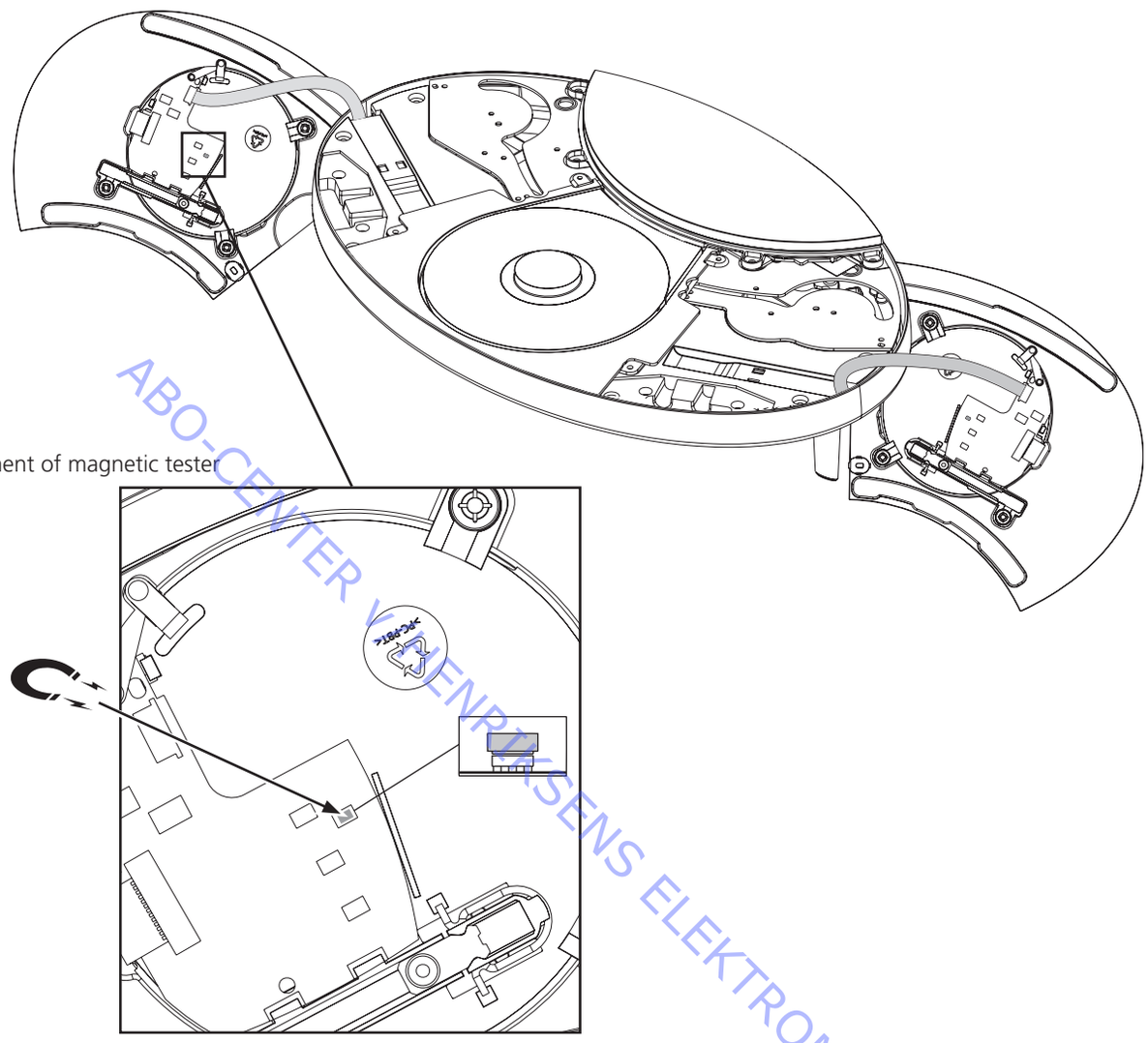

- Placement of magnetic tester

ABO-CENTER VEJENRØRSENS ELEKTRONIK

- Remove screws

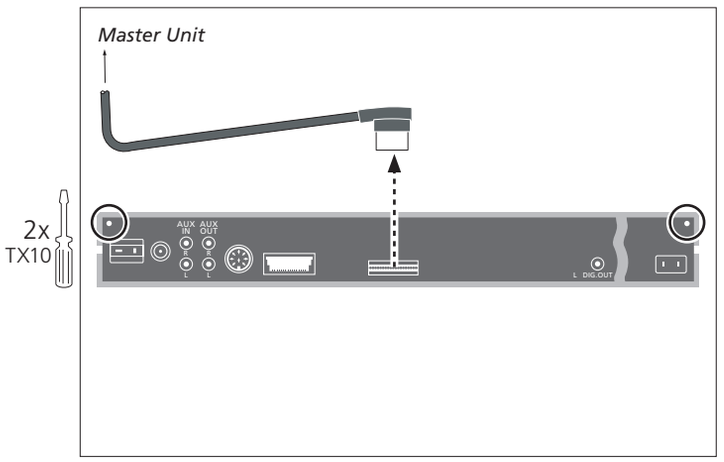

- Pull off cover as shown

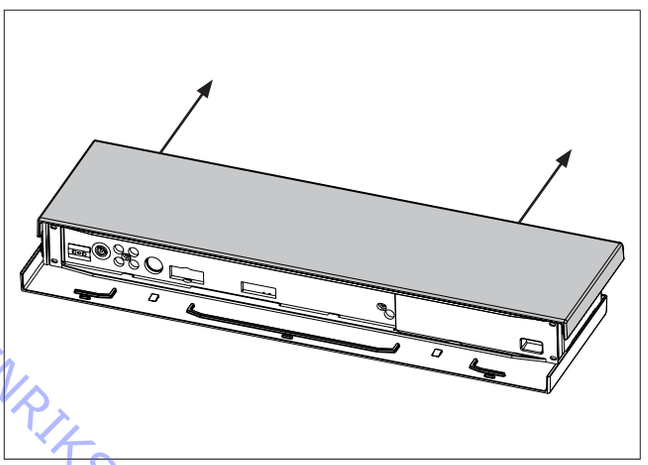

ABO-CENTER V/HENRIKSENS ELEKTRONIK

☞ 5.20 Socket unit in service position

- Placement of PCB50

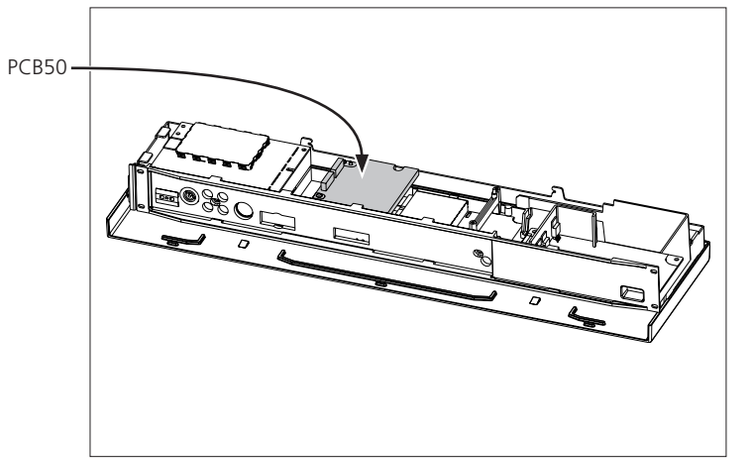

- Remove cables at PCB50

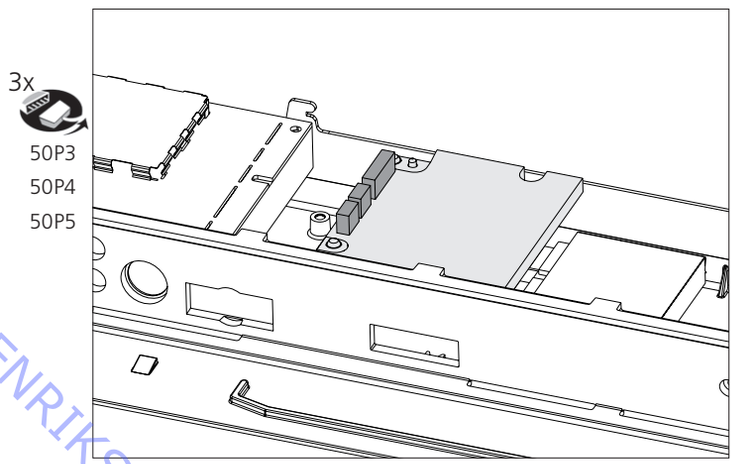

- Remove screws

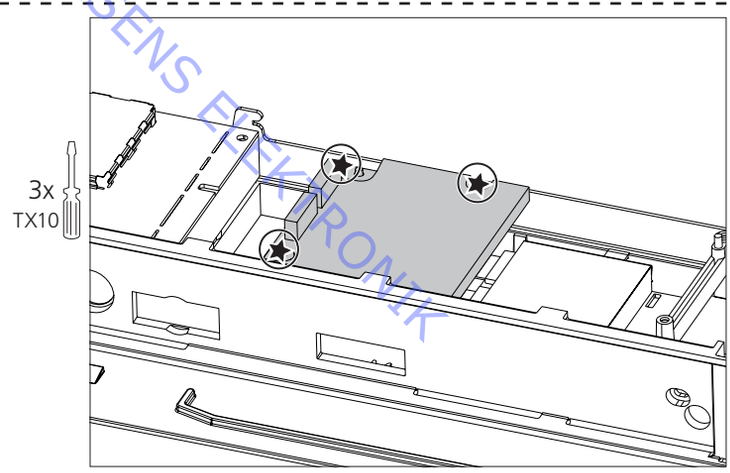

- Remove cables at PCB10

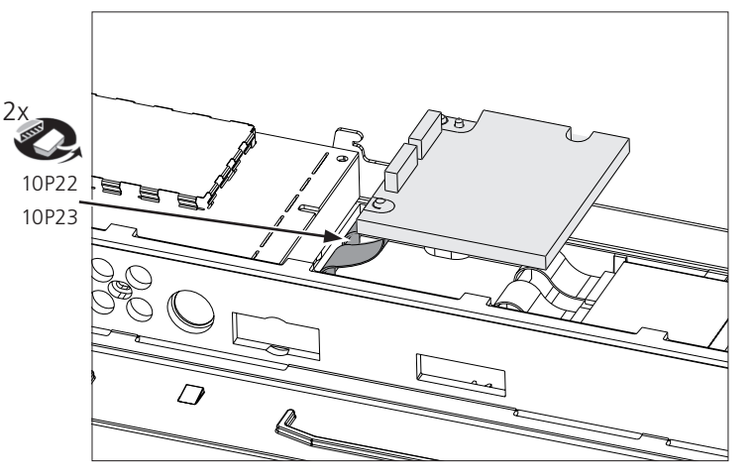

ABO-CENTER V/HENRIKSENS ELEKTRONIK

☞ 5.20 Socket unit in service position

- Placement of PCB85

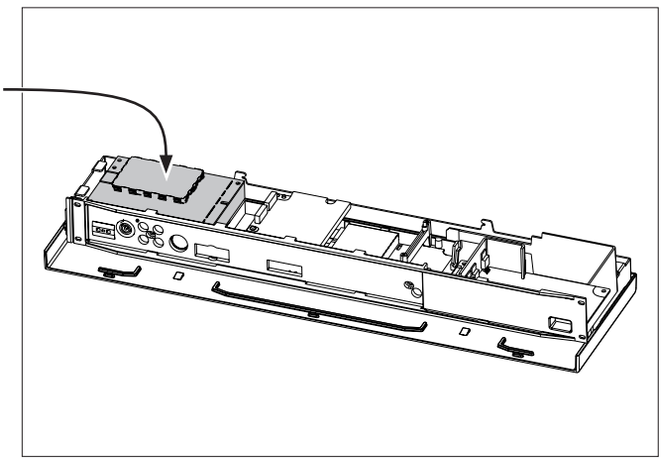

- Remove screws

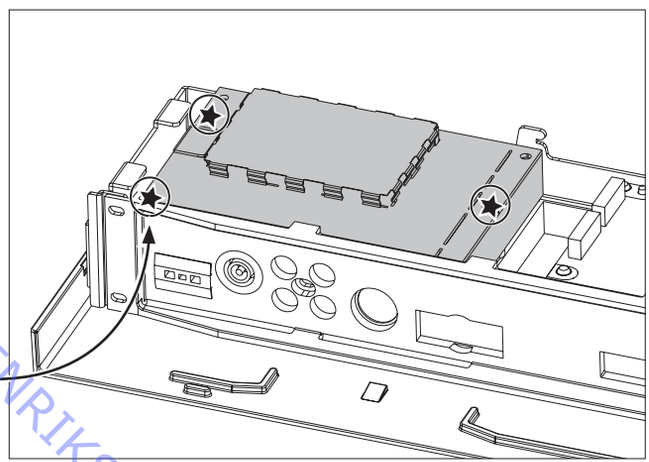

- Tilt PCB85 as shown

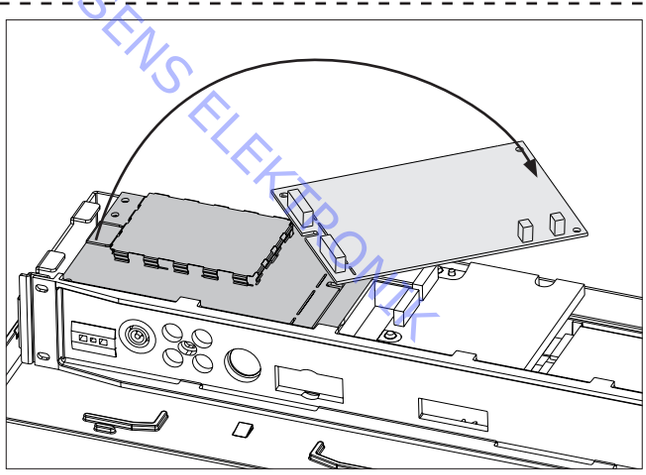

- Remove cables on backside of PCB85

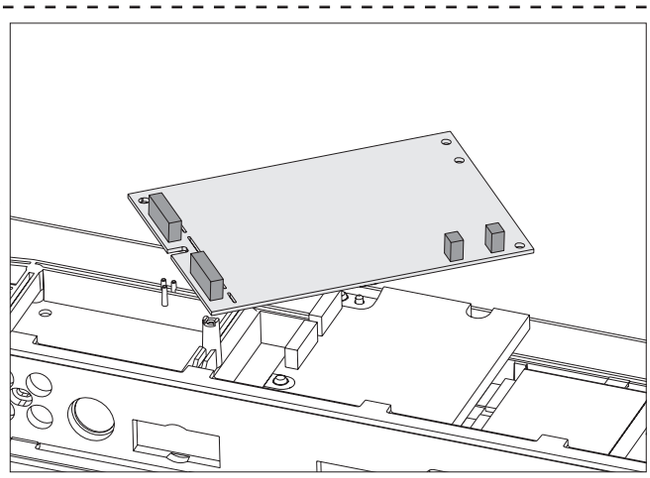

ABO-CENTER V/HENRIKSENS ELEKTRONIK

☞ 5.20 Socket unit in service position

- Placement of PCB60

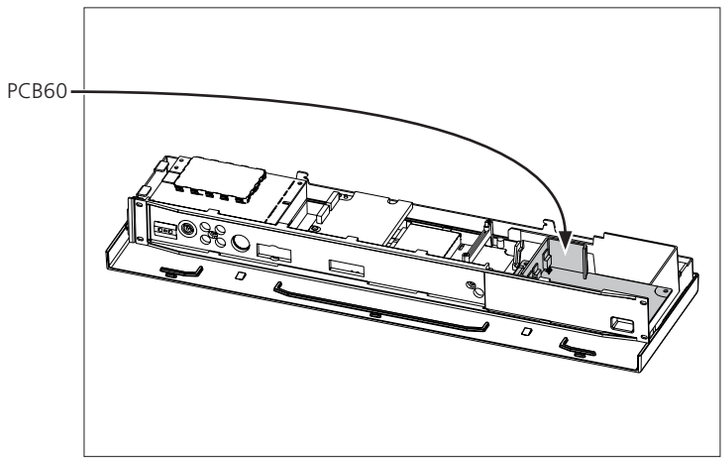

- Remove cables

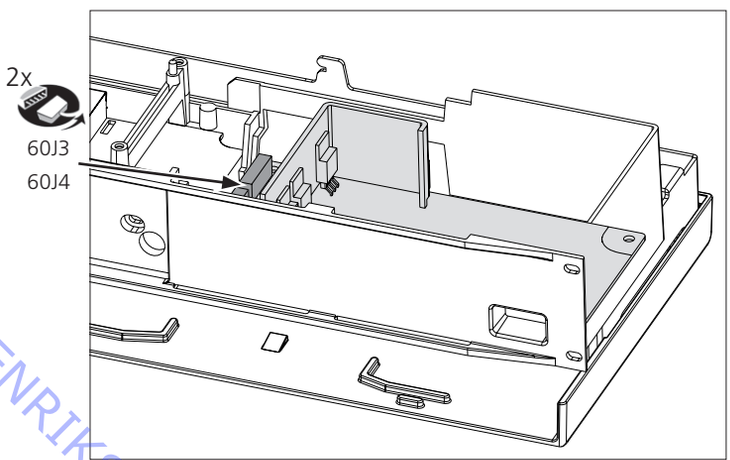

- Remove screws

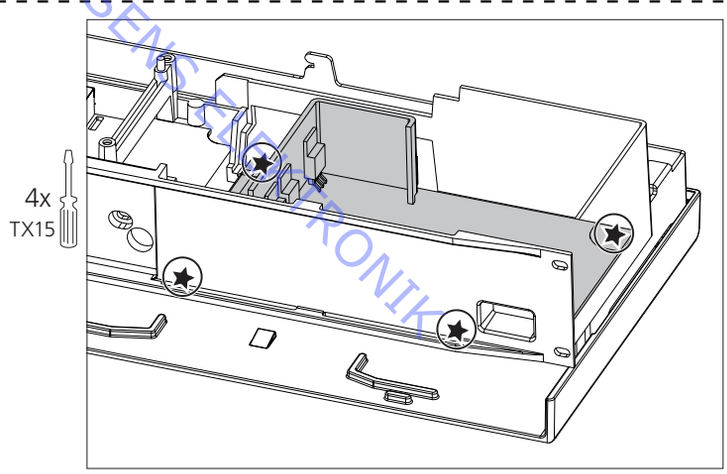

ABO-CENTER V/HENRIKSENS ELEKTRONIK

☞ 5.20 Socket unit in service position
☞ 5.21 Remove PCB50, Analog sound engine

- Placement of PCB6

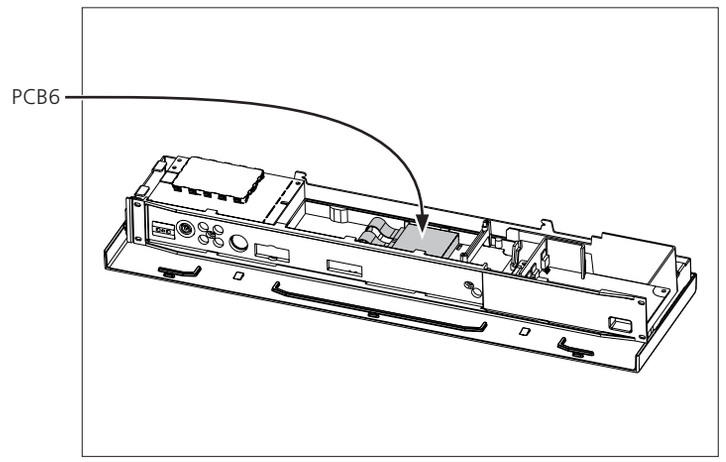

- Pull up PCB6

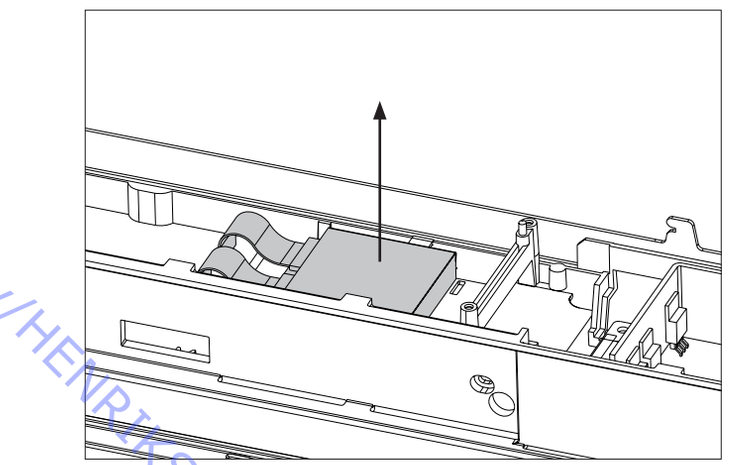

- Remove cables from PCB6

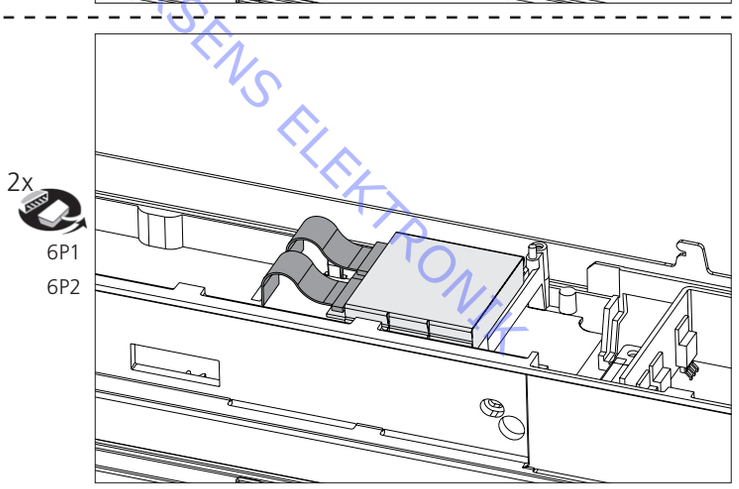

ABO-CENTER V/HENRIKSENS ELEKTRONIK

☞ 5.20 Socket unit in service position
☞ 5.21 Remove PCB50, Analog sound engine
☞ 5.22 Remove PCB85, Tuner module
☞ 5.23 Remove PCB60, Switch mode power supply
☞ 5.24 Remove PCB6, Microprocessor
☞ 5.26 Remove PCB37, DAB module

- Placement of PCB10

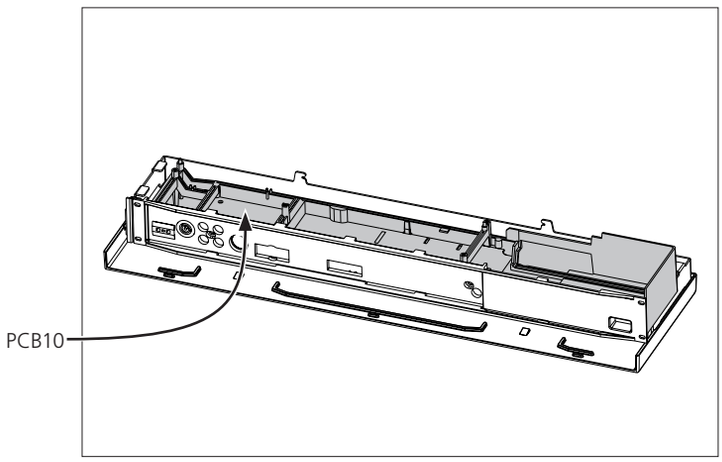

- Remove screws on Socket Panel front

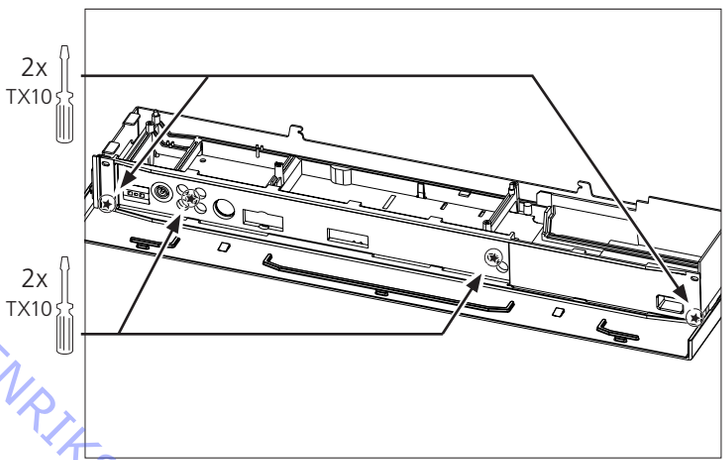

- Remove screws holding PCB10

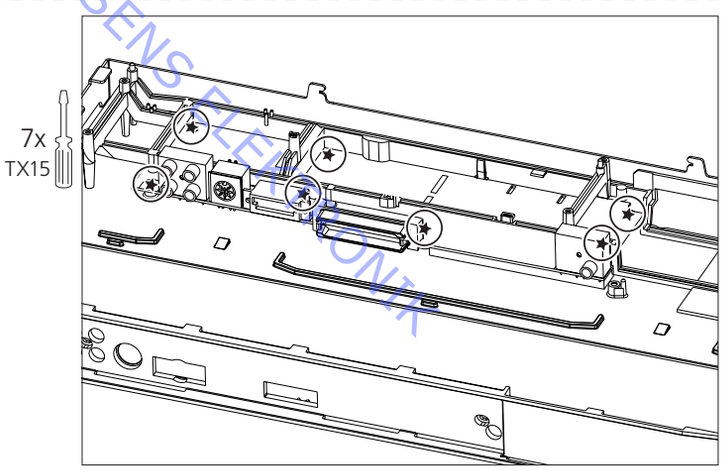

ABO-CENTER V/HENRIKSENS ELEKTRONIK

☞ 5.20 Socket unit in service position
☞ 5.22 Remove PCB85, Tuner module

- Remove cables

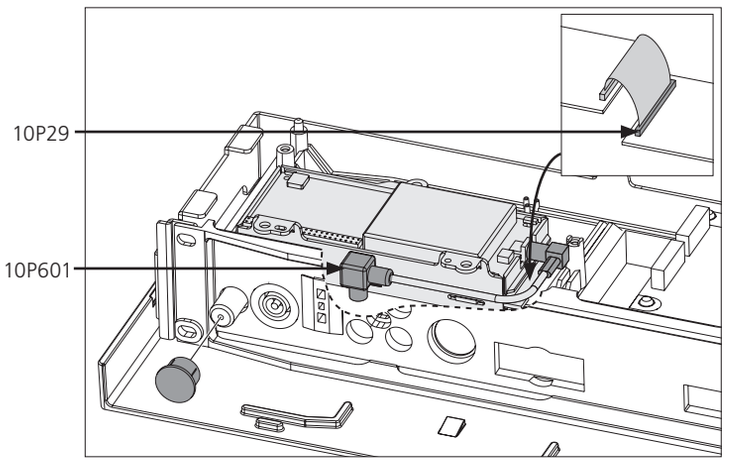

- Remove screws holding PCB37

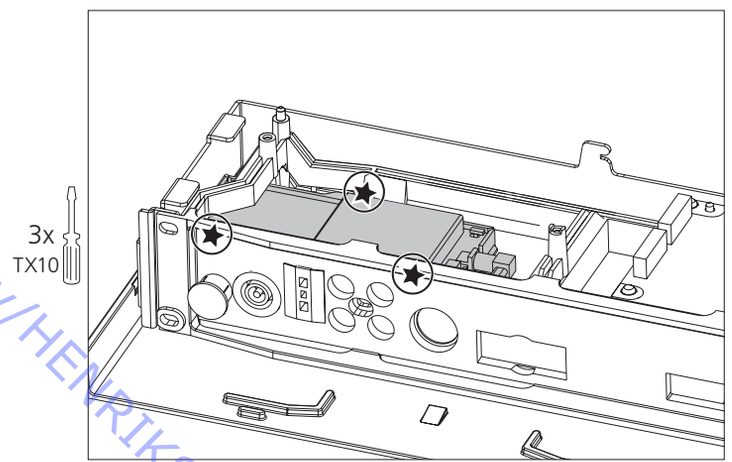

ABO-CENTER V/HENRIKSENS ELEKTRONIK

SPECIFICATION GUIDELINES FOR SERVICE USE	BeoCenter 2 Audio
Type no. and markets	See page 1.3
Master unit	
Dimensions W x H x D	372 x 50 x 243 mm
Weight	4.5 kg
Cabinet finish	Steel
CD Disc sizes	120 mm and 80 mm (in adaptor)
IR remote control	Beo4
Close-up operation panels	Sensi-touch-piezo-electrical keyboards
Display type	Vacuum Fluorescent Display with automatic light intensity control
Loader	Motorised doors and loader
Contains	CD, CD-loader, Display, Keyboard
Socket unit	
Dimensions W x H x D	536 x 150 x 55 mm
Weight	2.8 kg
Dimensions W x H x D, w/wall bracket	540 x 150 x 65 mm
Power supply, type 2825-2830, 2834, 2836, 2837, 2838	187 - 264 V / 50-60 Hz
Power supply, type 2831, 2832, 2833, 2835	85 - 132 V / 50-60 Hz
Power consumption	Typical 22 watts / stand-by 1.5 watts
Contains	Radio, sound processing, video switching, power supply, main microprocessor
Audio Performance	
CD naming	200 discs can be named
D/A Conversion	Sigma-Delta type
Frequency range	20 Hz - 20 kHz CD/AUX/DAB, 30 Hz - 15 kHz Radio, FM
Sampling frequencies	44.1, 48, 96 kHz
Playback the following	CD, CD-DA, CD-R, CD-RW
Sensitivity, DAB	Typical -98 dBm (Band III), -95 dBm (Band L)
Signal-to-noise-ratio, CD	≥105 dB A weighted
Signal-to-noise-ratio, DAB	Typical 103 dB A weighted
Tone controls	Bass, Treble, Loudness, Balance
Radio, DAB	174 – 240 MHz (Band III), 1452 – 1492 MHz (Band L), Decoding ≤384 kbit/s, Half and full rate sampling
Radio, FM	87.5 - 108.0 MHz, 76 - 90 MHz for Japan, De-emphasis 50/75µs
Radio, AM	150 - 1710 kHz in two bands, 9 or 10 kHz grid depending on type
RDS	Name, RadioText
Naming	60 stations
Digital output	Stereo and Encoded surround sound Linear PCM, AC-3, MPEG-2, DTS
Connections	
Master unit	
Headphone / Mini-jack female	Ø 3.5 mm 8 - 32 ohms
Socket unit	
Control (CTRL) / Mini-jack female	Ø 3.5 mm 8 - 32 ohms
	Inner: IR out
	Outer: Not connected
	Shield: Shield
Audio Line out	2 phono sockets, L/R (RCA)
	Output L/R Audio out 0.2 – 2V rms
Audio AUX	4 phono sockets (RCA) Input L/R Audio in 0.2 – 2V rms Output L/R Audio out 0.2 – 2V rms
Digital audio output (SPDIF)	Phono socket, orange (RCA)
	CDDA/LPCM
	MPEG-2

AUDIO CENTER V/HENRIK SEVEL ELEKTRONIK

Master Link	Pin 1	Data- -0.4V ±0.1V
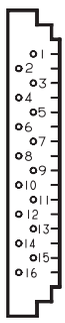	Pin 2	Data+ +0.4V ±0.1V
	Pin 3	ML sense
	Pin 4-8	N.C.
	Pin 9	ATI transmit
	Pin 10	ATI receive
	Pin 11	-supply voltage -7V to -15V (in St By -3V to -15V)
	Pin 12	+supply voltage +7V to +15V (in St By +3V to +15V)
	Pin 13	Audio -L 1V Bal, Rin 2.2MΩ, Rout 75Ω
	Pin 14	Audio +L 1V Bal, Rin 2.2MΩ, Rout 75Ω
	Pin 15	Audio -R 1V Bal, Rin 2.2MΩ, Rout 75Ω
	Pin 16	Audio +R 1V Bal, Rin 2.2MΩ, Rout 75Ω

Power link	Pin 1	PL ON ≥2.5V, OFF ≤0.5V
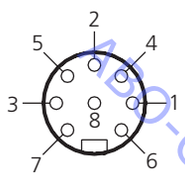	Pin 2	Signal GND
	Pin 3	Audio L out 0V - 6.5V RMS
	Pin 4	PL speaker ON ≥2.5V, OFF ≤0.5V
	Pin 5	Audio R out 0V - 6.5V RMS
	Pin 6	Data: High >3.5V, Low <0.8V
	Pin 7	Data GND
	Pin 8	Not used
	(Pin 3 and 5 are connected in the SUBWOOFER socket)	
	(jacket: No connect)	

DAB antenna, 75 ohm	1 F-connector
FM antenna, 75 ohm	1
Mains connector	1
Loader unit	1, connection cable (W14) between Master and Socket unit Connections: see wiring diagram

Subject to change without notice

MDO-CENTER V/HENRIKSENS ELEKTRONIK

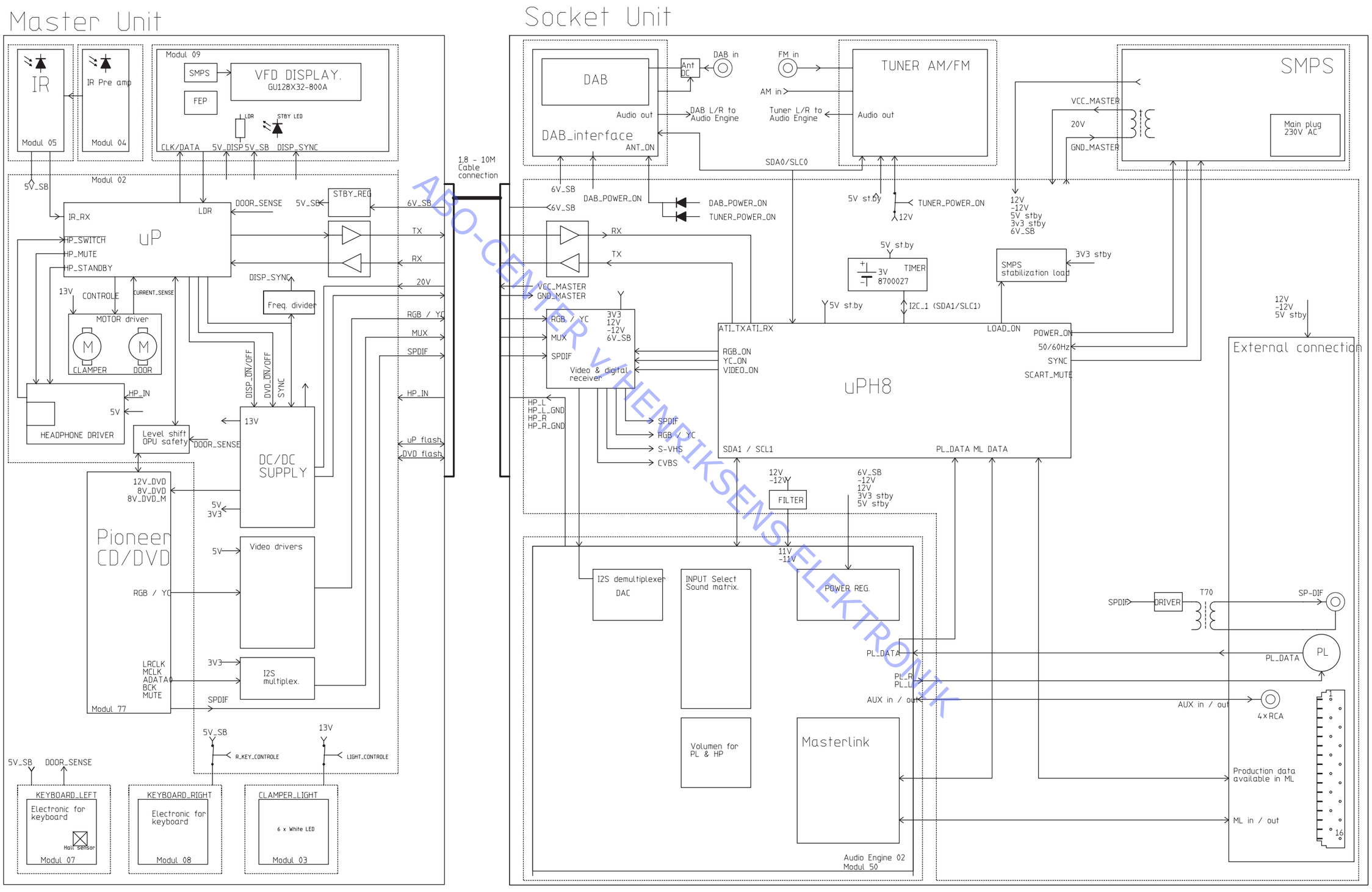

ABO-CENTER V HENDIKSEN ELEKTRONIK

ABO-CENTER V/HENRIKSENS ELEKTRONIK

Wiring diagram

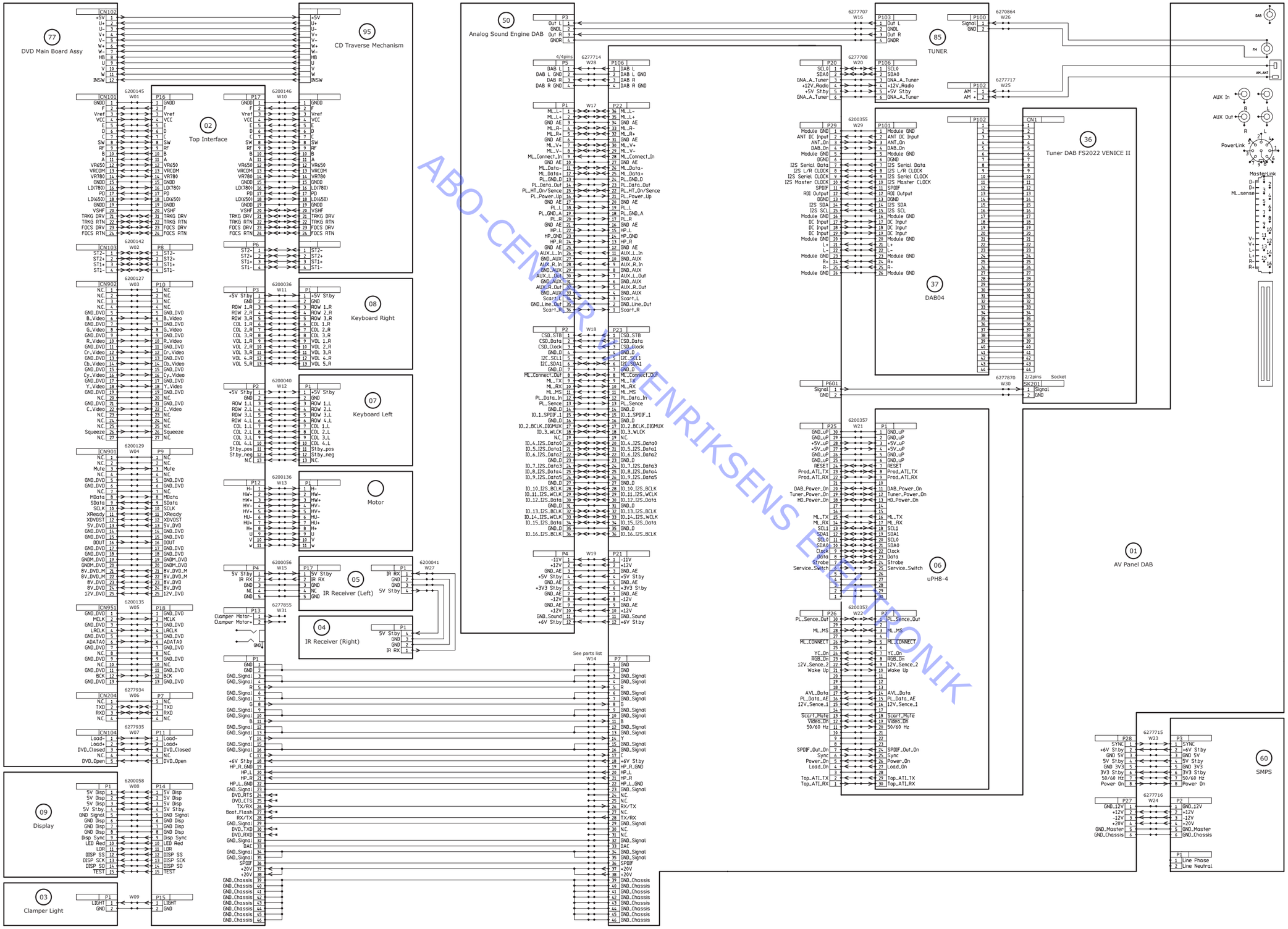

ABO-CENTRIKSENS ELEKTRONIK

Available parts
BeoCenter 2 Audio

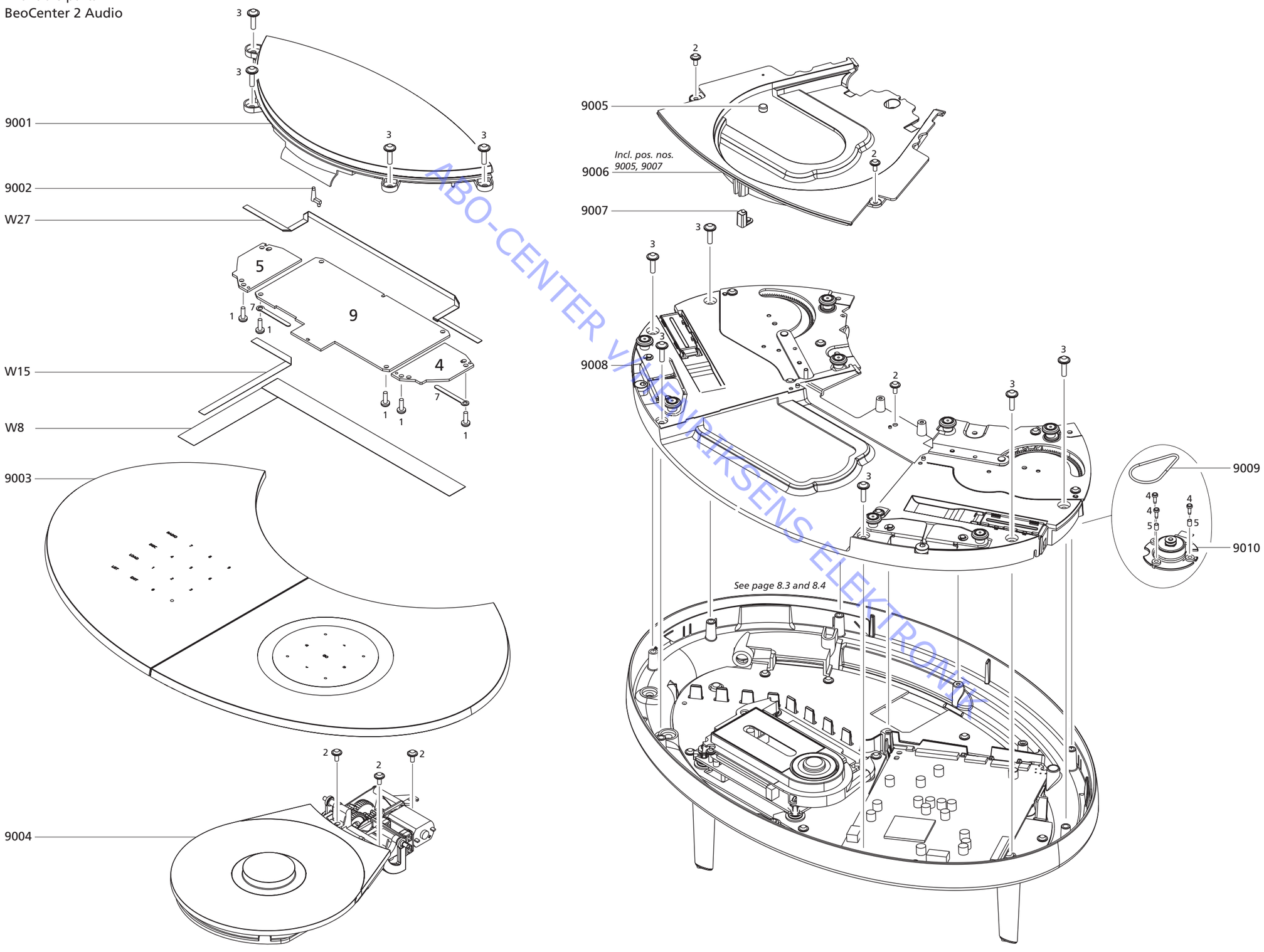

ABO-CENTER VALENRIKSENS ELEKTRONIK

BeoCenter 2 Audio

9001	3322000	Display
9002	3375420	Light guide
9003	2776794	Keyboard left + right
9004	3320966	Clamper, complete
	2732147	Belt
	8400005	Motor
	3164006	Clamper/cover
	3917006	Foam f/clamper
9005	3356077	Magnet
9006	3162044	Cover incl. pos. nos. 9005, 9007
9007	3907074	Rubber part f/cover
9008	3114116	Gearbox, complete
9009	2732004	Belt
9010	8400028	Motor

W8	6200058	Cable f/Display
W15	6200056	Cable f/Display
W27	6200041	Cable f/PCB4 - PCB5

PCB4	8000083	IR receiver two (right)

PCB5	8000082	IR receiver one (left)

PCB9	8330136	Display

Survey of screws etc.

1	2011048	Screw 2.5 x 8mm
2	2019033	Screw 2.5 x 6mm
3	2019034	Screw 3 x 12mm
4	2054057	Screw 2.8 x 8mm
5	2930074	Bushing
7	7530119	Solder pad

ABO-CENTER V/HENRIKSENS ELEKTRONIK

Bottom

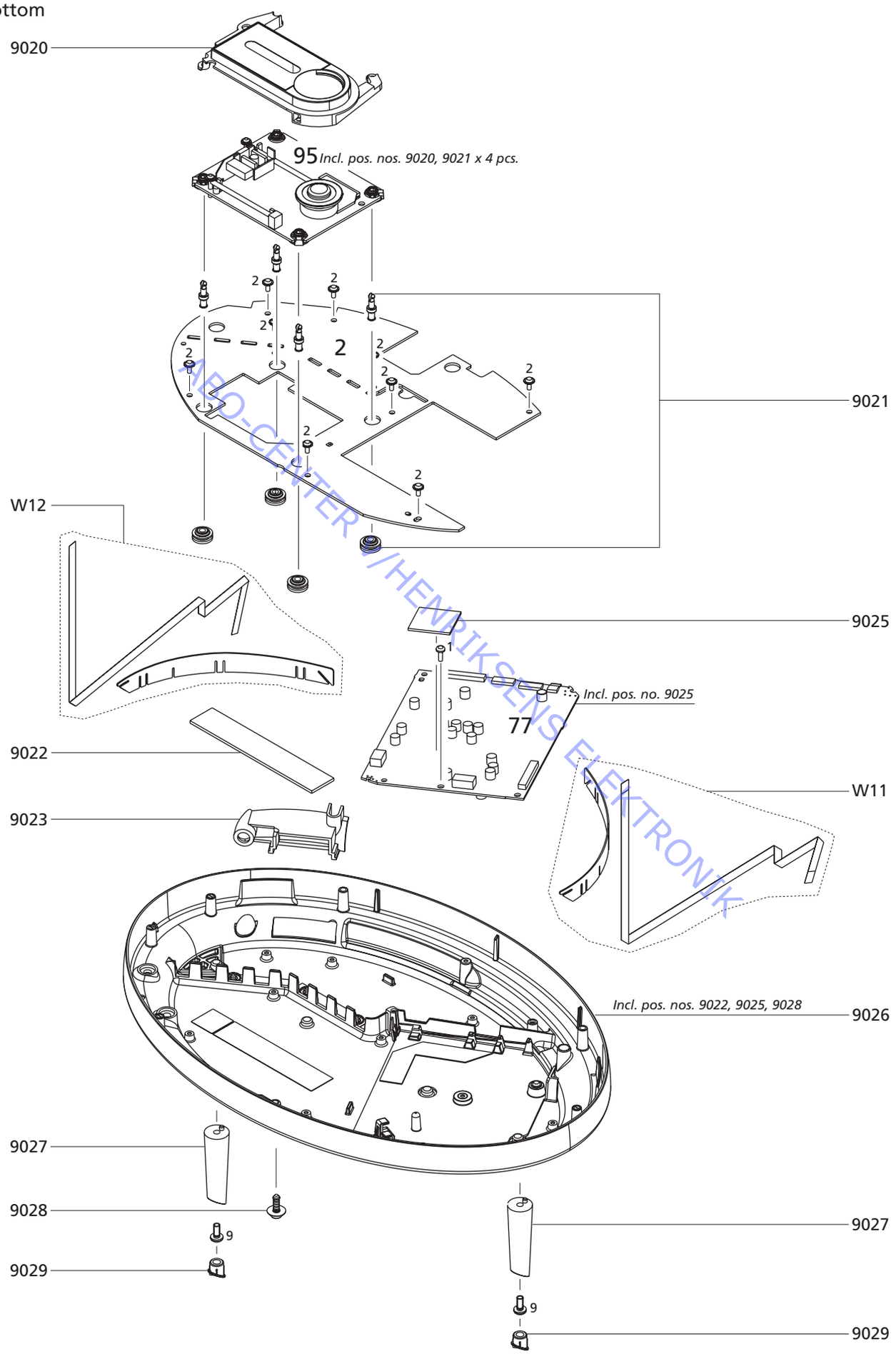

AEG-CENTER V/HENRIKSENS ELEKTRONIK

Bottom

9020	3320157	Cover f/CD
9021	2938033	Rubber bushing
9022	3947022	Tape f/bottom
9023	3169013	Cover f/socket
9025	2622554	Thermal conductive rubber
9026	3114114	Bottom incl. pos. nos. 9022, 9025, 9028
9027	3103013	Aluminium foot
9028	3103000	Rubber foot, small
9029	3103001	Rubber foot, large
W11	6200036	Cable w/holder, right
W12	6200028	Cable w/holder, left
PCB2	8002610	Top Interface
PCB77	8002609	DVD Main Board Assy incl. pos. nos. 9025
PCB95	8420025	DVD Traverse Mechanism incl. pos. nos. 9020, 9021 x 4 pcs.

Survey of screws

1	2011048	Screw 2.5 x 8mm
2	2019033	Screw 2.5 x 6mm
9	2042000	Screw 4 x 3.5mm

ABO-CENTER V/HENRIKSENS ELEKTRONIK

Socket unit

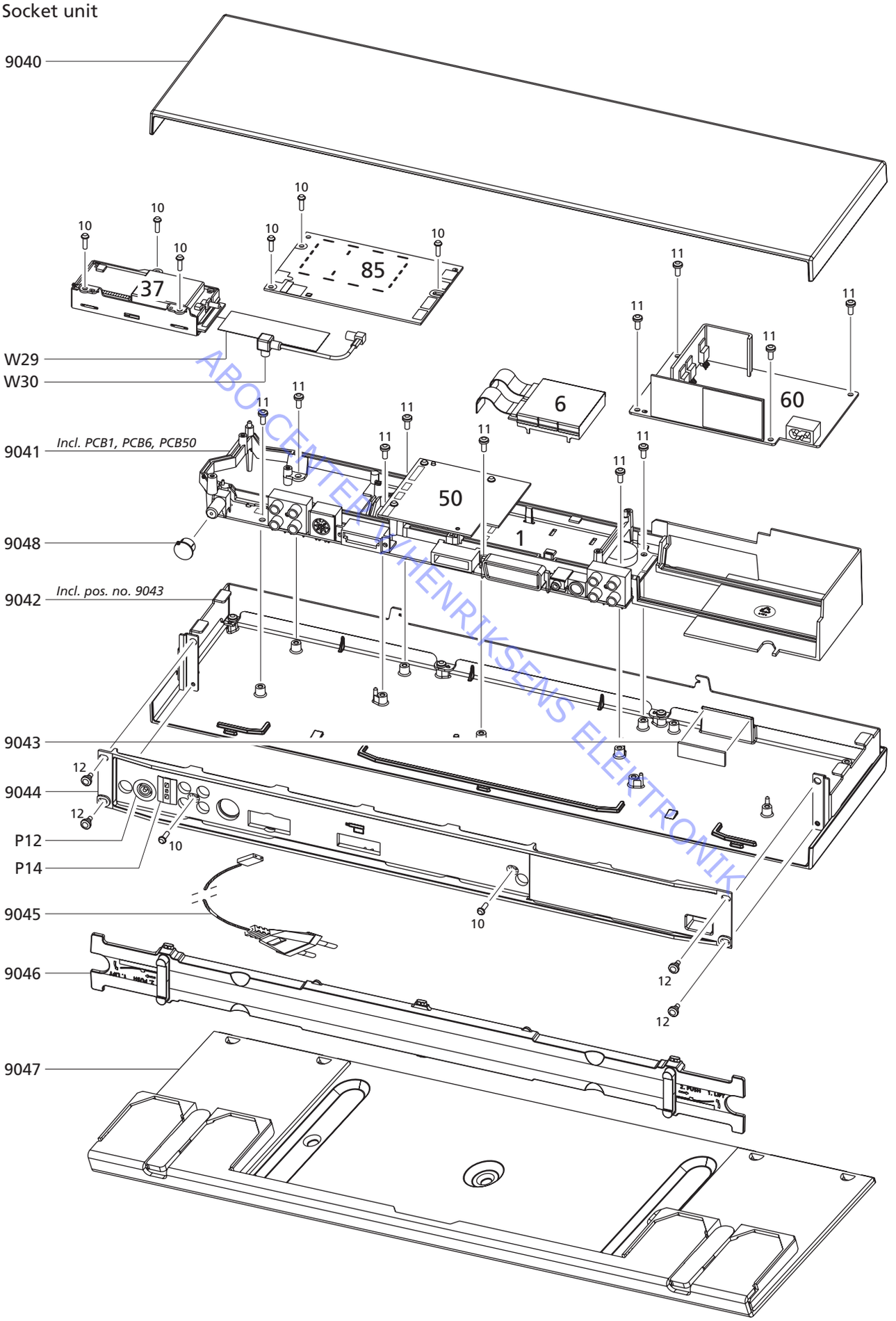

ABO CENTER WINENRIKSENS ELEKTRONIK

Socket unit

9040	3114045	Top f/socket unit
9041	8052275	Socket chassis (PCB1, PCB6, PCB50)
9042	3114048	Bottom incl. pos. nos. 9043
9043	3170085	Insulation piece
9044	3950025	Cover f/sockets
9045	6100245	Mains cable, EU
	6100328	Mains cable, GB
	6100306	Mains cable, US
	6100247	Mains cable, JPN
	6100248	Mains cable, AUS
	6100386	Mains cable, KOR
	6100040	Mains cable, CHN
9046	3165041	Cover f/bottom
9047	3031047	Wall bracket
9048	3341012	Cover f/DAB socket
P12	6270864	FM plug w/cable
P14	6277717	AM plug w/cable
PCB6	8002663	Microprocessor H8-4
PCB37	8002046	PCB37, DAB module
PCB60	8002986	SMPS - 230V
	8001433	SMPS - 115V
PCB37	8002046	DAB module
PCB85	8002977	Tuner - EU
	8000116	Tuner - JPN
W29	6200355	Wire 1P29 - 37P101
W30	6277870	Wire 1P601 - 36SK201

Survey of screws

10	2052011	Screw 3 x 10mm
11	2015183	Screw 3.5 x 8mm
12	2930021	Screw 3 x 8mm

ABO-CENTER V/HENRIKSENS ELEKTRONIK

Packing

BeoCenter 2

3396212	Set of foam
3917224	Foam foil
3392793	Outer carton

Socket unit

3396217	Set of foam
3917224	Foam foil
3392795	Outer carton

Wire bundles

See wiring diagram page 7.3.
The part no. is printed on the diagram above the wire bundle, as shown.

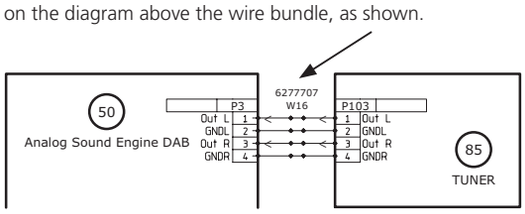

Connection cables W14

6270086	Connection cable, 1.8m - EU
6270087	Connection cable, 3m - EU
6270088	Connection cable, 5m - EU
6270089	Connection cable, 10m - EU
6270090	Connection cable, 1.8m - US
6270091	Connection cable, 3m - US
6270092	Connection cable, 5m - US
6270093	Connection cable, 10m - US

Parts not shown

3375021	Product cover
3395303	Back-up suitcase
3629000	Screwdriver TX6
3629002	Screwdriver TX8
3629144	Special tool f/bezel

ServiceTool

3375055	P.I.T. box
	ServiceTool – download from Retail System / BeoWise
3375397	Cable kit for ServiceTool, complete
3375151	USB - RS232 bridge

Available documentation

See Retail Ordering System

Accessories

8720063	FM dipol antenna
8720047	AM loop antenna
8720044	DAB antenna

ABO-CENTER ØSTENRIKSENS ELEKTRONIK

Floor stand 2170

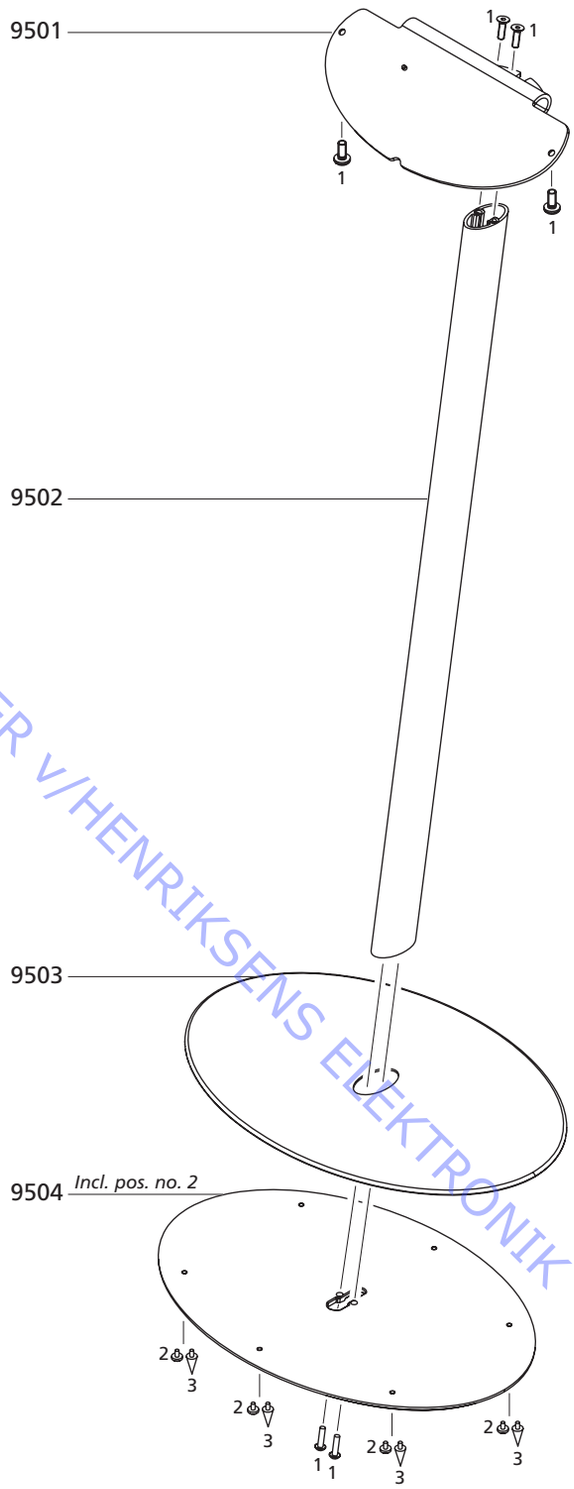

ABO-CENTER V/HENRIKSENS ELEKTRONIK

9501	3459446	Top plate incl. pos. no. 7
9502	2950033	Tube
9503	3459002	Cover
9504	2752023	Bottom incl. pos. no. 2
1	3390667	Bag w/3 x 2 screws, 2 x hexagon spanners, 6 x spikes pos. no. 3, 2 x spacer
2	3103392	Foot
3	3103390	Spike
7	3103325	Spacer
	3396234	Foam - order 2 pcs.
	3392824	Outer carton
	3504728	Guide

Stand/Wall bracket 2171

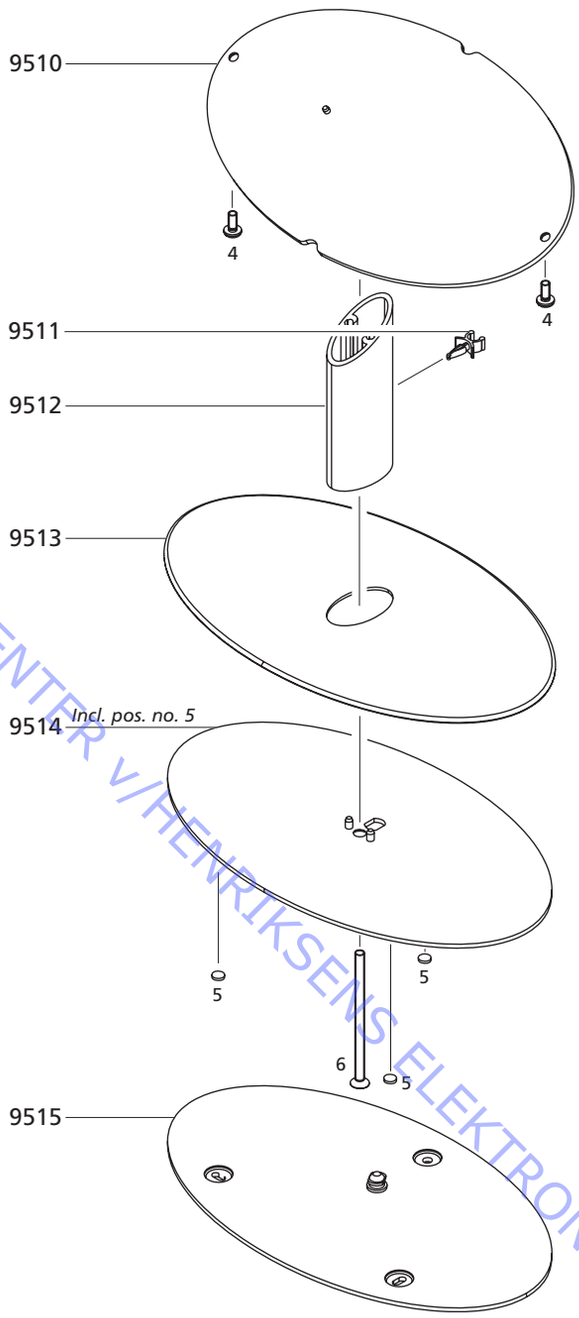

ABO-CENTER V/HENRIKSENS ELEKTRONIK

9510	3459448	Top plate
9511	3034400	Cable holder
9512	2950034	Tube
9513	3459447	Cover
9514	2752029	Bottom incl. pos. no. 5
9515	3459449	Wall plate
4	3390626	Bag w/2 x screws, 2 x hexagon spanners
5	3103325	Foot
6	2058016	Screw 6 x 100mm
	3396235	Foam - order 2 pcs.
	3392825	Outer carton
	3504729	Guide

ABO-CENTER V/HENRIKSENS ELEKTRONIK

ABO-CENTER V/HENRIKSENS ELEKTRONIK

Bang & Olufsen
DK-7600 Struer
Denmark

Phone +45 96 84 11 22*
Fax +45 97 85 39 11

3538062 04-07